60K-3P-480 HYBRID INVERTER

QUICKSTART GUIDE

Technical Support: (USA) +1 (972) 575-8875 ext. 2 | support@sol-ark.com

60K Installation QuickStart

CONTENTS

Inverter Overview **1**

Before You Start **2**

Step 1. Confirm all items are in the box. 2

Step 2. Set up MySolArk. 3

Step 3. Prepare the site. 4

Step 4. Mount inverter to surface with proper hardware. 5

Inverter Wiring **6**

Step 5. Connect inputs and outputs. 6

Step 6. Check wiring area. 7

Step 7. Confirm proper wiring for high voltage battery integration. 8

Step 8. Check Polarity and Voltage. 9

Step 9. Turn inverter ON. 10

Set Up Batteries **11**

Step 10. Set up battery communications. 11

Step 11. Check battery communications. 12

Check Inverter Setup **13**

Step 12. Check PV Input. 13

Step 13. Check Grid Parameters. 14

Step 14. Confirm Grid Phasing and AC Voltage. 15

Step 15. Check Load AC voltage. 16

Step 16: Test Island Mode. 17

Set Up WiFi **18**

Step 17. Connect the Dongle. 18

Step 18. Create the plant. 19

Step 19. Configure the WiFi network. 20

Step 20. Check Network Stability. 21

Step 21. Check system performance. 22

Copyright © 2026 Sol-Ark LLC

60K Installation QuickStart

MORE INFORMATION..... 23

Mounting the Sol-Ark (Step 4 Details)..... 24

Inverter General Description (Step 5 Details)..... 27

External CT Sensors (Step 5 Details Continued) 28

Installing Filter Rings (Step 5 Details Continued) 33

Connection Requirements (Step 6 Details) 34

Battery Communications (Step 10 Details) 36

Battery Setup (Step 11 Details)..... 41

Connecting PV Modules (Step 12 Details) 47

Check Grid Parameters (Step 14 Details) 49

Test Island Mode (Step 16 Details) 53

Alternate Method for Connecting to WiFi using IP Address (Step 17 Details) . 54

Create a Plant on MySolArk (Step 18 Details) 56

System Work Modes (Step 21 Details) 58

Finding the Inverter Software Version 62

Power-ON Sequence..... 63

60K Installation QuickStart

About this guide

This QuickStart guide provides the essential steps for installing a Sol-Ark inverter. This guide is divided into two parts:

- The **30K Installation QuickStart** section starting on the next page lists the basic steps you need, with links to more detailed information in the second part of the guide.
- The **More Information** section starting on page **Error! Bookmark not defined.** provides additional details that you might need.

For full information, see the *60K-3P-480V Installation Manual*.

Disclaimer

This QuickStart Guide offers a brief installation and commissioning overview for the Sol-Ark 60K-3P-480V Hybrid Inverter. It is not intended to, and should not, replace the *60K-3P-480V Installation Manual* or to address all matters referred to in the Manual.

This product may be dangerous if improperly configured, installed or operated. You are urged to read and review the full Manual, including applicable data sheets, and to visit the Sol-Ark Knowledge Hub at www.sol-ark.com to learn more fully about this product.

The information included in this QuickStart Guide is subject to, and qualified by, the information set forth in the Manual, including important disclaimers and warnings that limit or exclude Sol-Ark's liability.

See the Commissioning and Programming sections of this *QuickStart Guide* for details, including advanced configurations, necessary to meet the requirements or needs for system performance.

Copyright © 2026 Sol-Ark LLC

60K Installation QuickStart

Inverter Overview

60K-3P-480V

277/480V, 220/380V, 3-Phase Wye & Delta

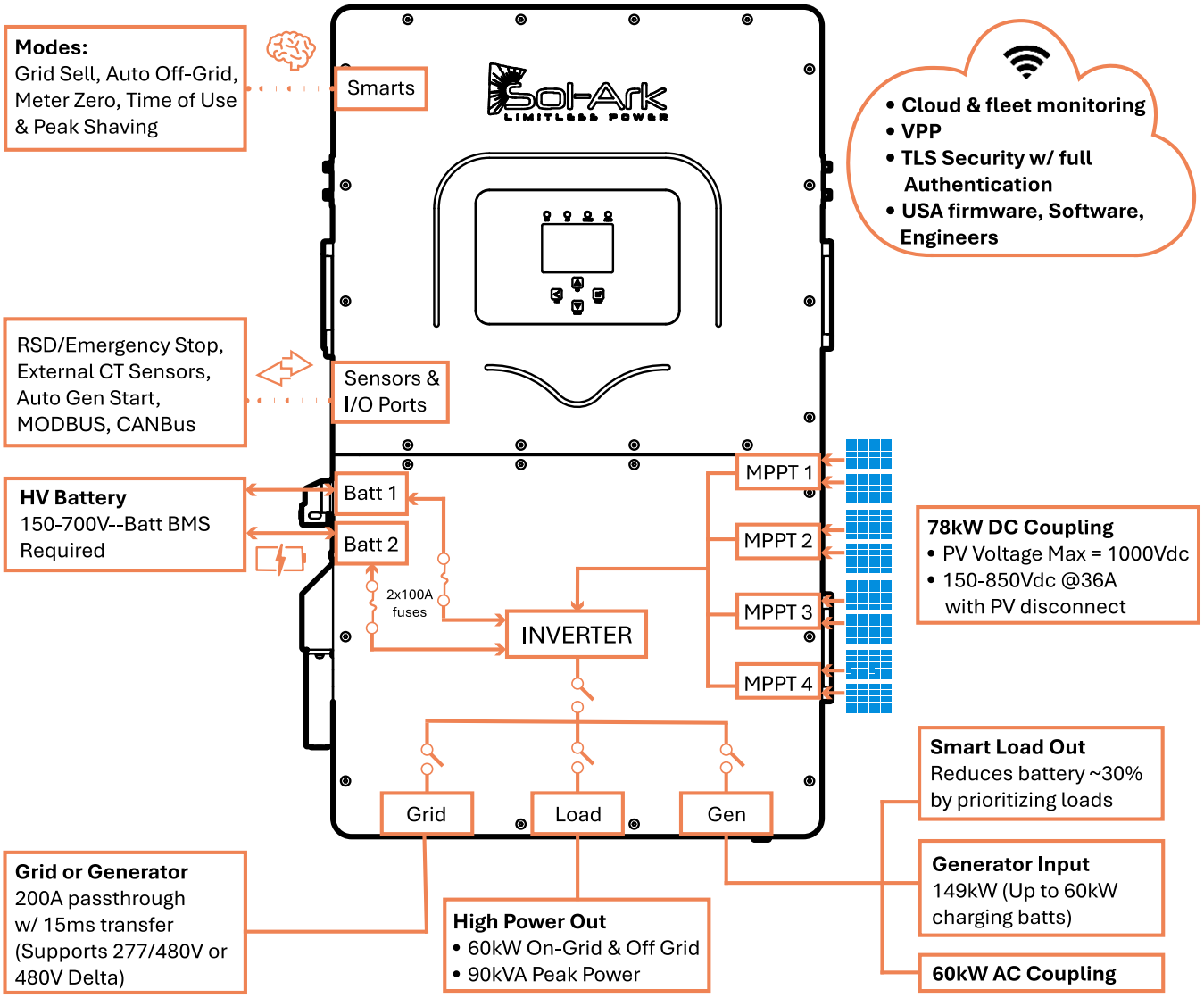

60K Installation QuickStart

Before You Start

Step 1. Confirm all items are in the box.

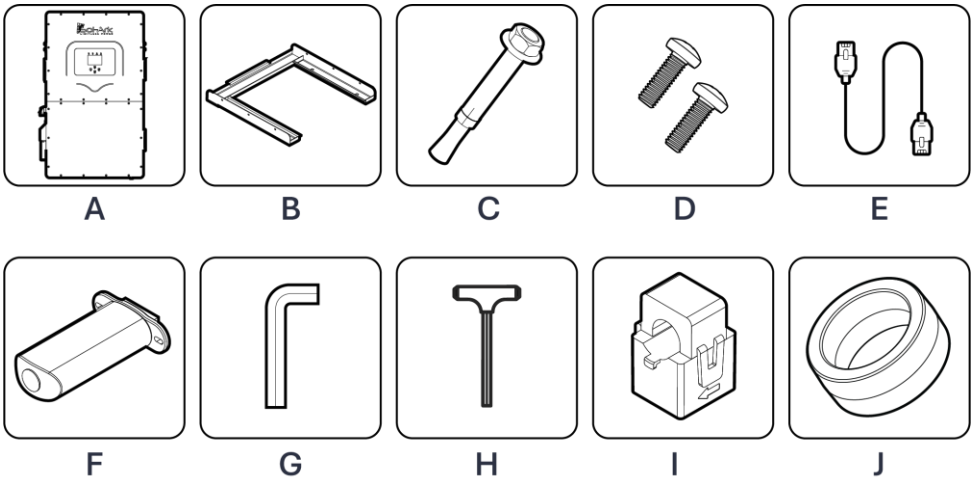

Component	Description	Quantity
A	Sol-Ark 60K-3P-480V inverter	1
B	Inverter Mounting Cleat	1
C	M12x60mm expanding anchors for masonry anchoring	4
D	M4x12mm screws – Set screws for mounting carrier	9
E	Inverter Parallel Cable - CAT 5 comm cable	1
F	Wi-Fi / Ethernet Gateway (dongle)	1
G	3mm L-type hex key for front panel screws	1
H	8mm T-type hex key for AC terminals	1
I	300A Current transformers (CT sensors)	3
J	Filter rings	3

J - Filter Rings

Other Items you'll need:

- USB Stick (Battery updates)
- Smart Phone or Laptop
- Phase Detection Tool

Copyright © 2026 Sol-Ark LLC

60K Installation QuickStart

Step 2. Set up MySolArk.

Create a MySolArk Account (MSA) by downloading the app or visiting www.mysolark.com to access the desktop version.

MySolArk in the App Store

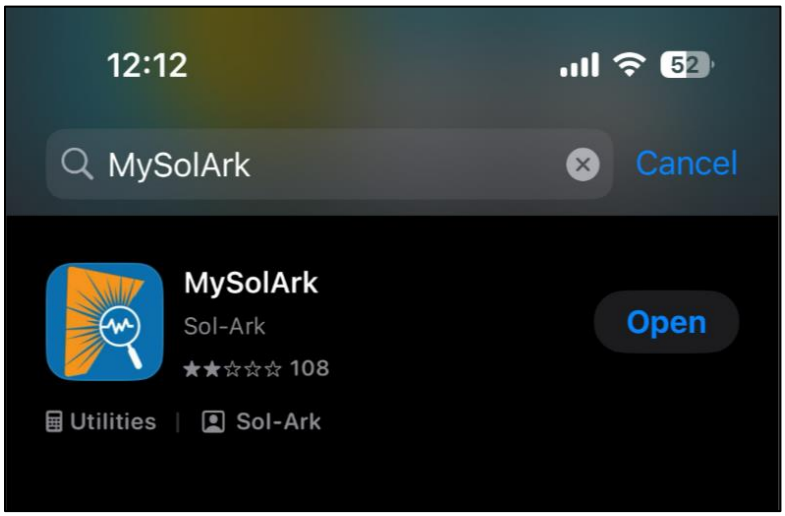

MySolArk Desktop on the Sol-Ark Website

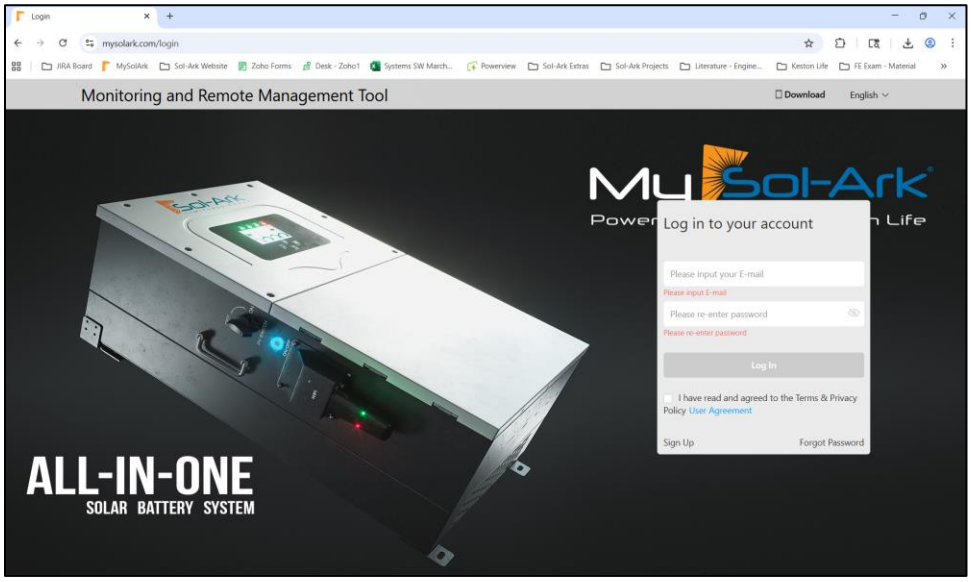

- The email used will be primary account for all created plants

➢ See *MySolArk User Guide* for more information

60K Installation QuickStart

Step 3. Prepare the site.

Locate a suitable area to mount the inverter and follow requirements:

- 6” vertical clearance (15.2 cm)
- 2” side clearance (5.1 cm)
- 6” side clearance from another system (15.2 cm)
- Protect LCD from direct exposure to UV light
- Operating temperature of –40 °F to 140 °F (–40 °C a 60 °C)

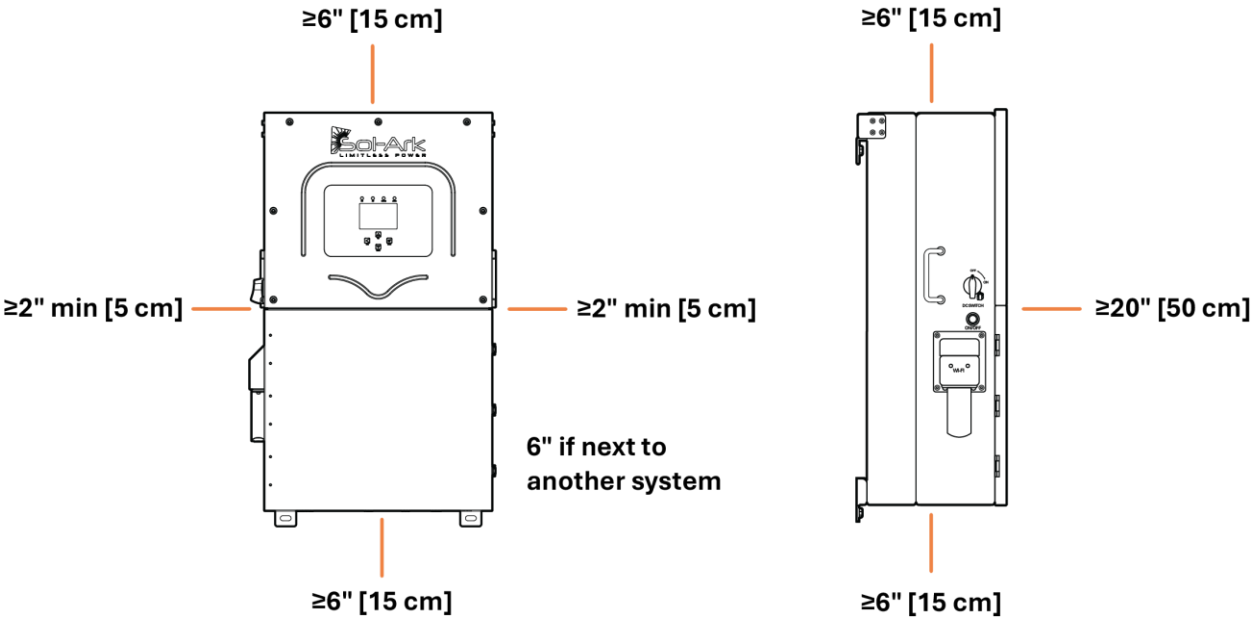

NOTE: Under certain circumstances, NEC requires greater clearances, and installer should abide by AHJ if mandated. See NEC 2023 paragraph 110.26 and Canadian Electrical Code CSA C22.1

Copyright © 2026 Sol-Ark LLC

60K Installation QuickStart

Step 4. Mount inverter to surface with proper hardware.

A. Use screws or anchors suitable to support inverter weight (176 lb / 80kg)
   - Concrete or masonry: Minimum (4) M12x60mm expanding anchors
   - Wood frame: Minimum (4) 1/2” lag screws with flat washers
   - Metal frame: Minimum (4) 1/4” self-tapping screws with flat washers

B. Secure inverter to French Cleat (6) of the M4x12mm socket head screws

C. Inverter should be in optimal upright position as shown below.

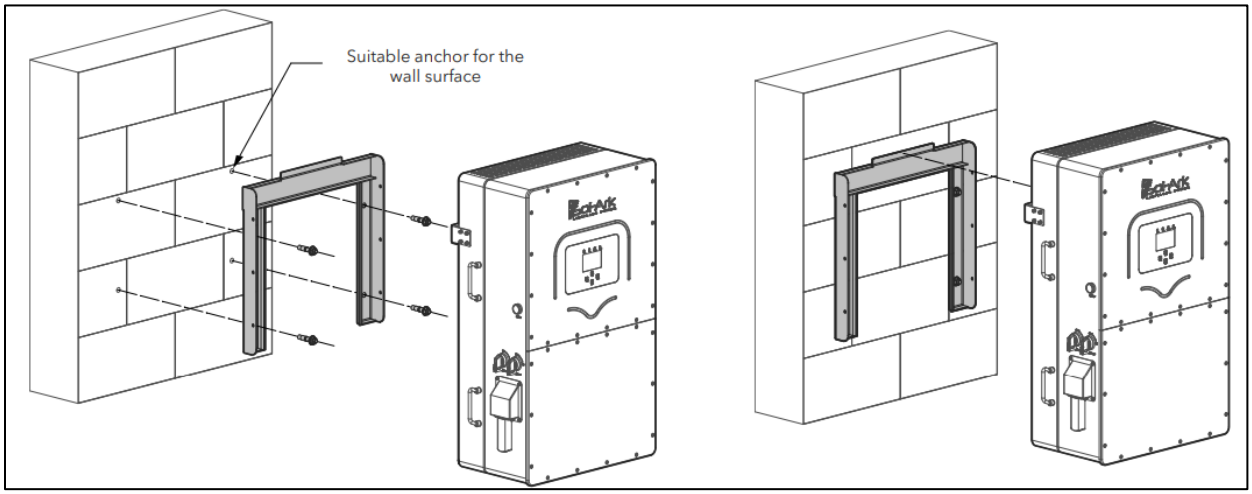

➢ See Mounting the Sol-Ark for additional information.

60K Installation QuickStart

Inverter Wiring

Step 5. Connect inputs and outputs.

Locate inputs in the user wiring area and connect all wire into inputs/outputs if applicable.

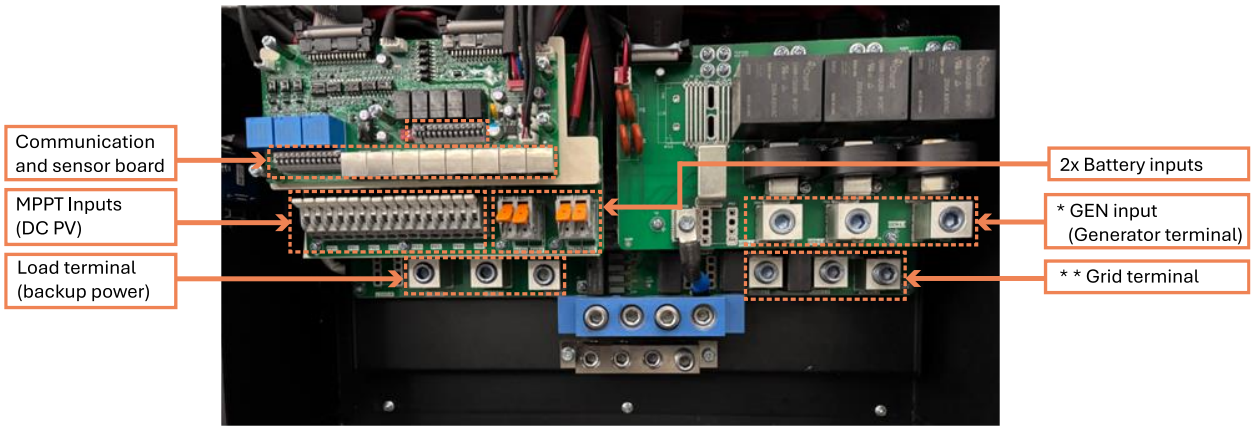

Notes

- Gen port can also be used for AC Coupling or Smart load output
- Grid port can also be used for a generator

➢ See Inverter General Description for more information on inverter wiring.

Copyright © 2026 Sol-Ark LLC

60K Installation QuickStart

Step 6. Check wiring area.

In the inverter user wiring area, check these:

- Connections have correct torque
- Wire is sized appropriate to terminal rating and NEC requirements

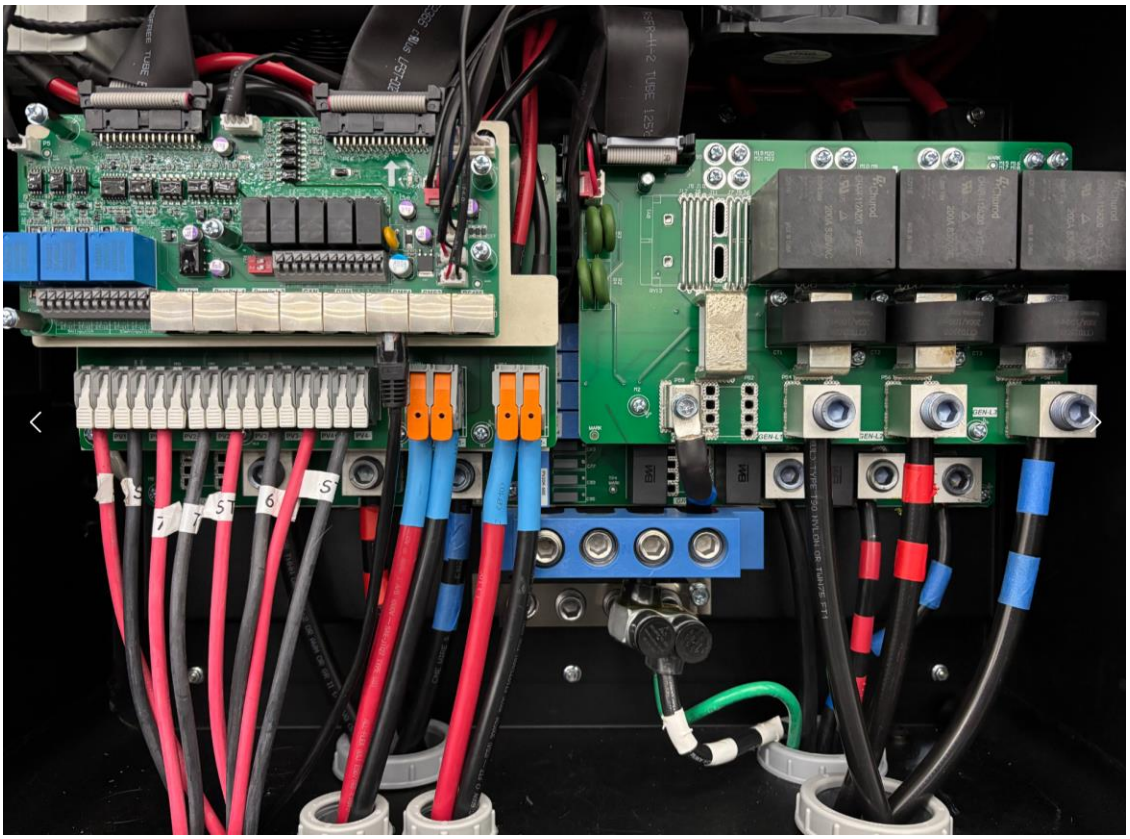

NOTE: Do NOT have inverter, PV, batteries, or grid/gen AC disconnect closed while checking wires.

➢ See Connection Requirements (Step 6 Details) for more information.

60K Installation QuickStart

Step 7. Confirm proper wiring for high voltage battery integration.

Wire into both **BATT1** and **BATT2** inputs for full 60kW output.

- Single battery
  - Parallel battery to **BATT1** and **BATT2** inputs
  - Use **BMS1** input
- Single battery bank (≥ 2 battery stacks)
  - Parallel battery to **BATT1** and **BATT2** inputs
  - Use **BMS1** input
- Dual battery bank
  - Run each battery independently to **BATT1** and BATT2 input
  - Use **BMS1** for battery 1, and **BMS2** input for battery 2

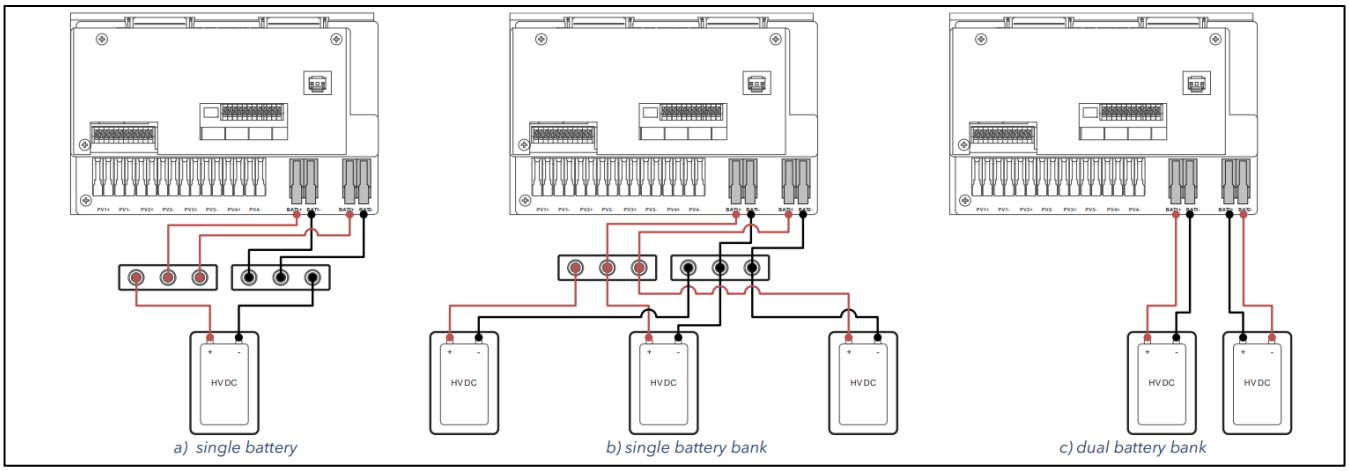

➢ See [Battery Communications]() for detailed information on integrating batteries.

Copyright © 2026 Sol-Ark LLC

60K Installation QuickStart

Step 8. Check Polarity and Voltage.

Turn ON batteries, then check wiring polarity and DC voltage on each input.

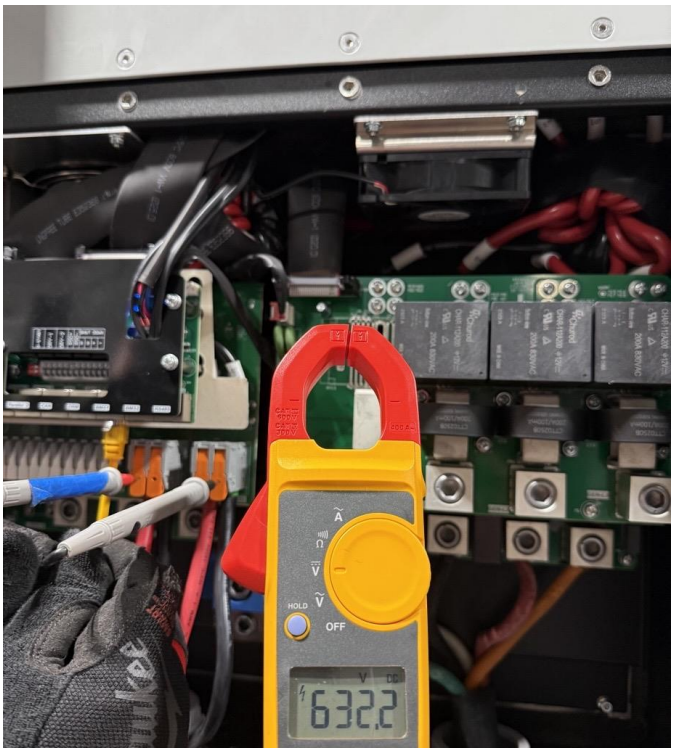

- Use a multimeter to check (+) and (-) voltage to confirm correct polarity and operating voltage from the battery bank
- See the battery manufacturer manual for proper battery startup sequence

60K Installation QuickStart

Step 9. Turn inverter ON.

Press the inverter **ON** button and wait for Normal LED to light up above the screen. This may take a few minutes.

If you're waiting more than 2 minutes, check the battery voltage on the terminals to make sure it's within operating voltage.

Copyright © 2026 Sol-Ark LLC

Set Up Batteries

Step 10. Set up battery communications.

On the Inverter screen, go to **Settings > Battery Setup** to program battery communications.

A. Check the **BMS Lithium Batt** check box
B. Check **Parallel bat1&bat2** if the battery bank is parallel to both inputs
C. Tap **OK**

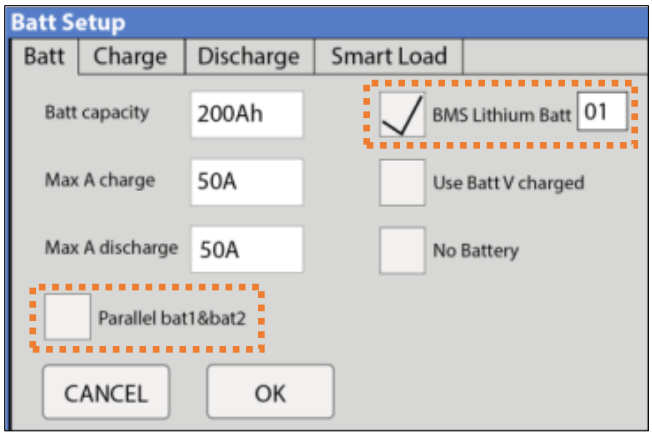

➢ See Battery Setup to confirm that all battery settings are programmed appropriately according to the battery specifications.

60K Installation QuickStart

Step 11. Check battery communications.

On the Main screen, tap **Li-Batt Info** to confirm communications are established between the battery and inverter.

Check these values to make sure they are correct:

- Voltage
- SOC
- Temperature
- Charge/discharge current limit

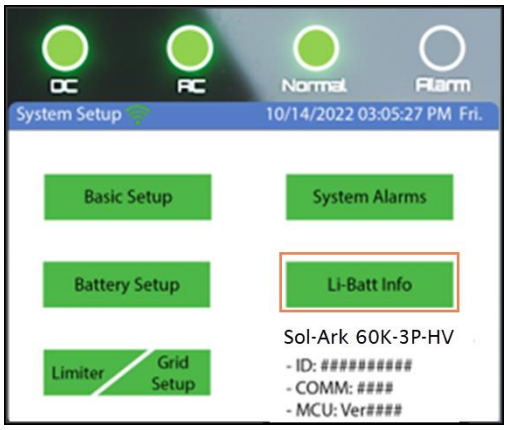

Copyright © 2026 Sol-Ark LLC

60K Installation QuickStart

Check Inverter Setup

Step 12. Check PV Input.

For each MPPT:

A. Check for correct polarity
B. Ensure expected open circuit voltage (Voc)
C. Turn ON PV disconnect
D. Confirm the DC LED is lit above screen

- Make sure the external DC disconnect for PV is turned on
- If using rapid shutdown device with transmitter energized by inverter LOAD output, the circuit must be turned on to produce PV power

➢ See Connecting PV Modules for more information.

Step 13. Check Grid Parameters.

On the inverter screen, go to **Settings > Grid Param** and make sure that appropriate parameters are enabled.

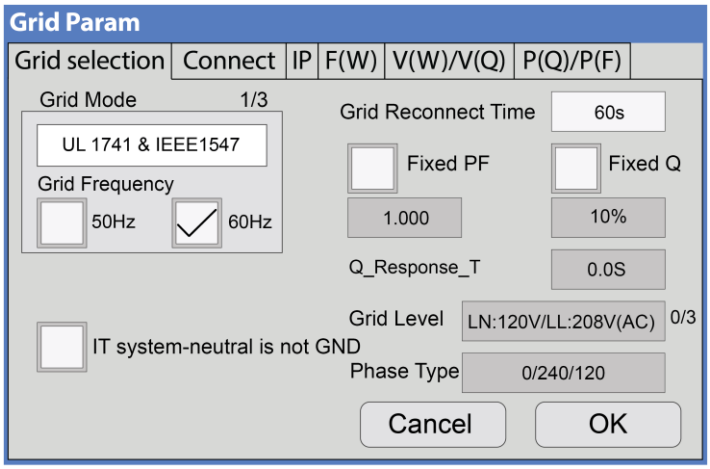

- Program correct Grid Level depending on service
- Enable **IT system-neutral is not GND** if service is a no-neutral DELTA configuration

➢ See Check Grid Parameters (Step 14 Details) for more information on grid settings.

Copyright © 2026 Sol-Ark LLC

Step 14. Confirm Grid Phasing and AC Voltage.

A. Turn ON the Grid AC disconnect

B. Check grid phasing and AC voltage levels. Confirm AC LED is lit above screen

C. For off-grid setups with a generator, turn on the generator and follow the same steps on GEN or GRID input, depending on where it's wired.

NOTE: For off-grid installations with a generator, turn on the generator and follow the same steps on the GEN or GRID input, depending on how it is wired.

Voltage Check with Multimeter

Grid Phase Detection Meter

You can use a multimeter and phase tool to validate grid levels coming into terminals.

- **If off-grid configuration with a generator,** turn on generator and follow the same steps on GEN or GRID input (depending on where it's wired)
- **If off-grid configuration with no generator**, skip steps 15 and 16 starting on the next page

➢ See Connecting PV Modules (Step 12 Details) for more information.

60K Installation QuickStart

Step 15. Check Load AC voltage.

A. Measure AC voltage at LOAD terminals
B. Turn ON the breaker or disconnect feeding LOAD panel
C. Check to make sure circuits on the load panel are energized

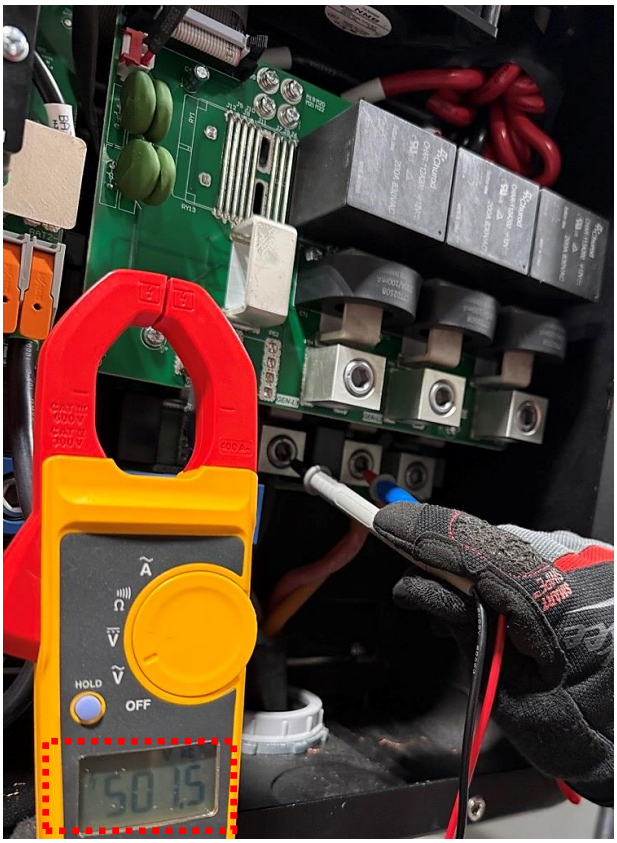

- Take phase-neutral and phase-phase measurements and make sure voltage on LOAD terminals are present and matches grid levels, if applicable

Copyright © 2026 Sol-Ark LLC

Step 16: Test Island Mode.

A. Turn the grid AC disconnect to OFF position. With batteries, Inverter should seamlessly switch to battery backup to load output.

B. On main screen of inverter, click the battery icon to display the detailed voltage screen.

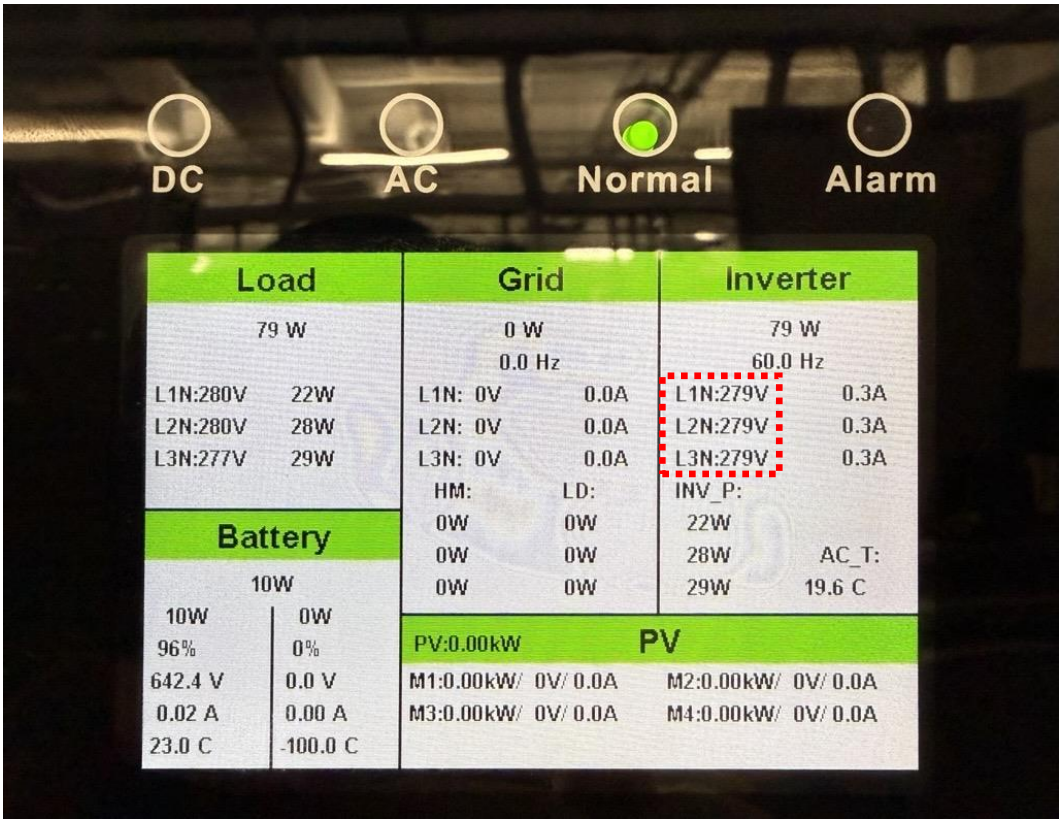

- Under **INV** column, make sure L1, L2, and L3 have correct voltage
- Under **Batt** column, make sure battery voltage is present

➢ For more information, see [Test Island Mode (Step 16 Details)]

Set Up WiFi

Step 17. Connect the Dongle.

Connect the dongle into the **DP-9** WiFi port on the left side of the inverter.

- A solid red LED indicates power to the device.

➢ For more information, see [Alternate Method for Connecting to WiFi using IP Address (Step 17 Details)]

Copyright © 2026 Sol-Ark LLC

Step 18. Create the plant.

Using the **MySolArk** app, create a plant by scanning the QR code and filling out required fields.

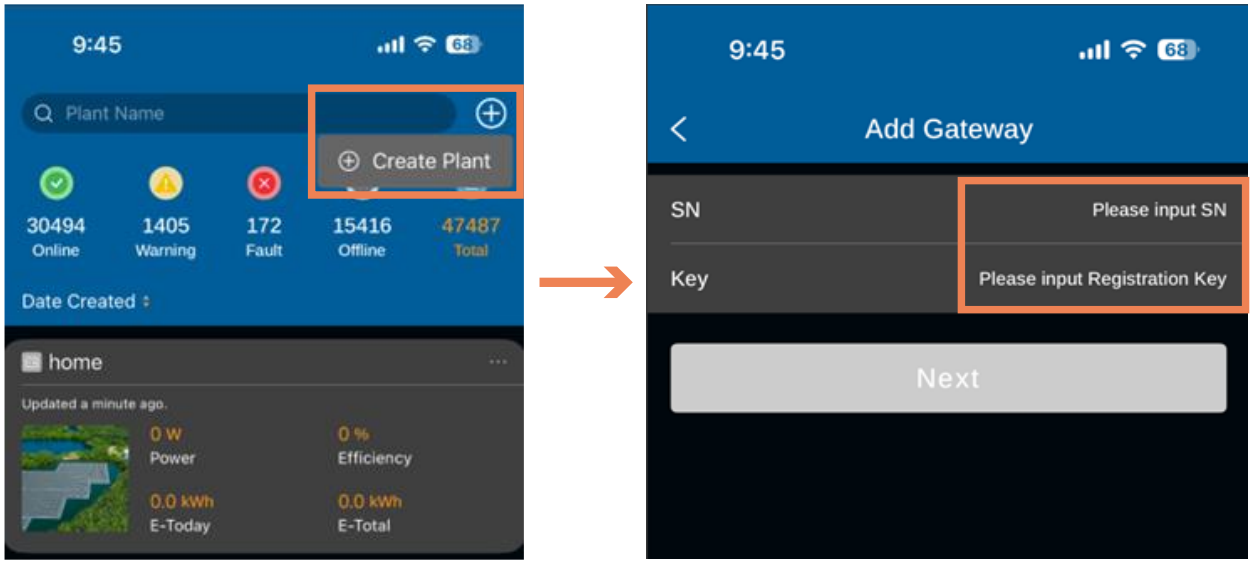

➢ For more information, see [Create a Plant on MySolArk](#).

Step 19. Configure the WiFi network.

A. Configure the WiFi network to the dongle via MSA. A green LED will light on the dongle when the network is connected.

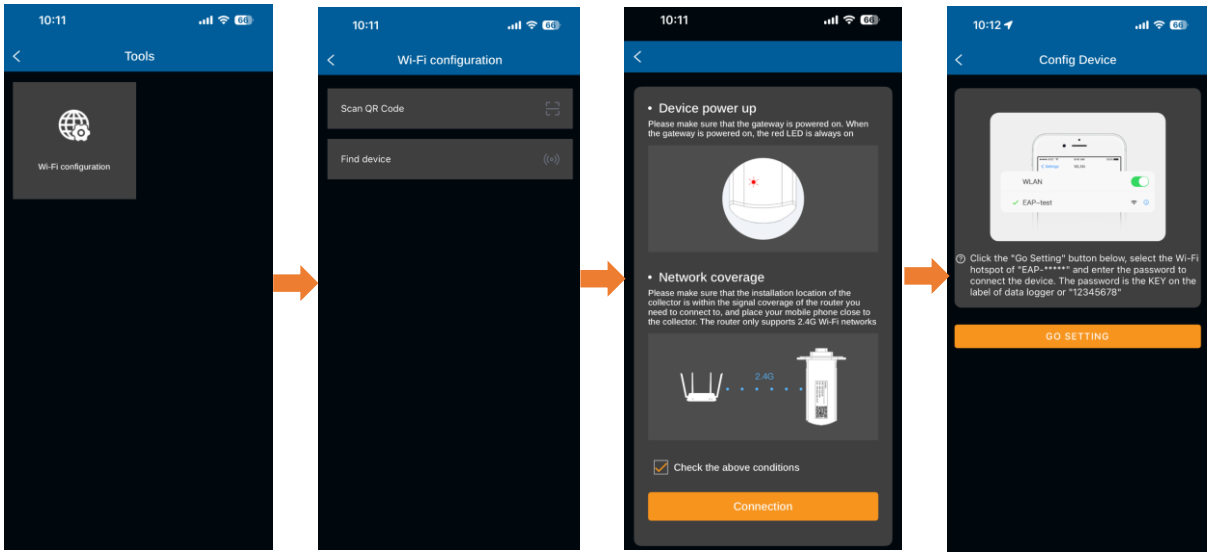

B. Check LED Status of Dongle.

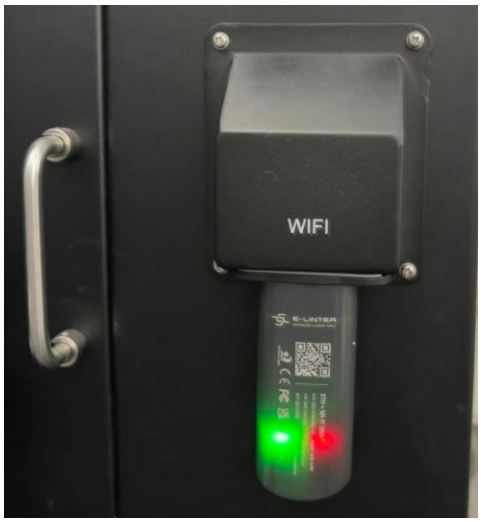

➢ If unsuccessful, try [Alternate Method for Connecting to WiFi using IP Address (Step 17 Details)]

Copyright © 2026 Sol-Ark LLC

Step 20. Check Network Stability.

In MySolArk, review data to ensure the network is stable and power flow data is showing correctly.

NOTE: MSA data is not real-time, as a data point will populate every 5 minutes. It's recommended to compare the Sol-Ark power flow on the GUI screen against what MSA reports for the created plant.

Step 21. Check system performance.

If necessary, go through the rest of the settings to program the desired performance of the system.

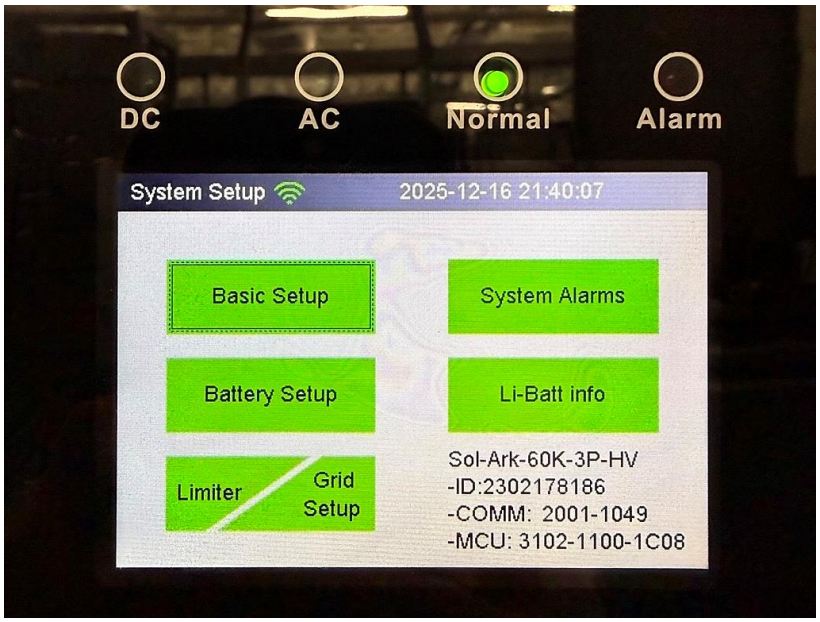

- For information about the different system work modes, go to [System Work Modes (Step 21 Details)]
- For information about TOU settings, go to [Time of Use (TOU)]
- For information about peak shaving, go to [Advanced Setting – Grid Peak Shaving]

Copyright © 2026 Sol-Ark LLC

MORE INFORMATION

More Information

Mounting the Sol-Ark (Step 4 Details)

A. Considering the dimensions of the inverter, find a suitable location for the system. There must be at least 6 in [15 cm] of vertical clearance and 2 in [5 cm] of side clearance for proper heat dissipation.

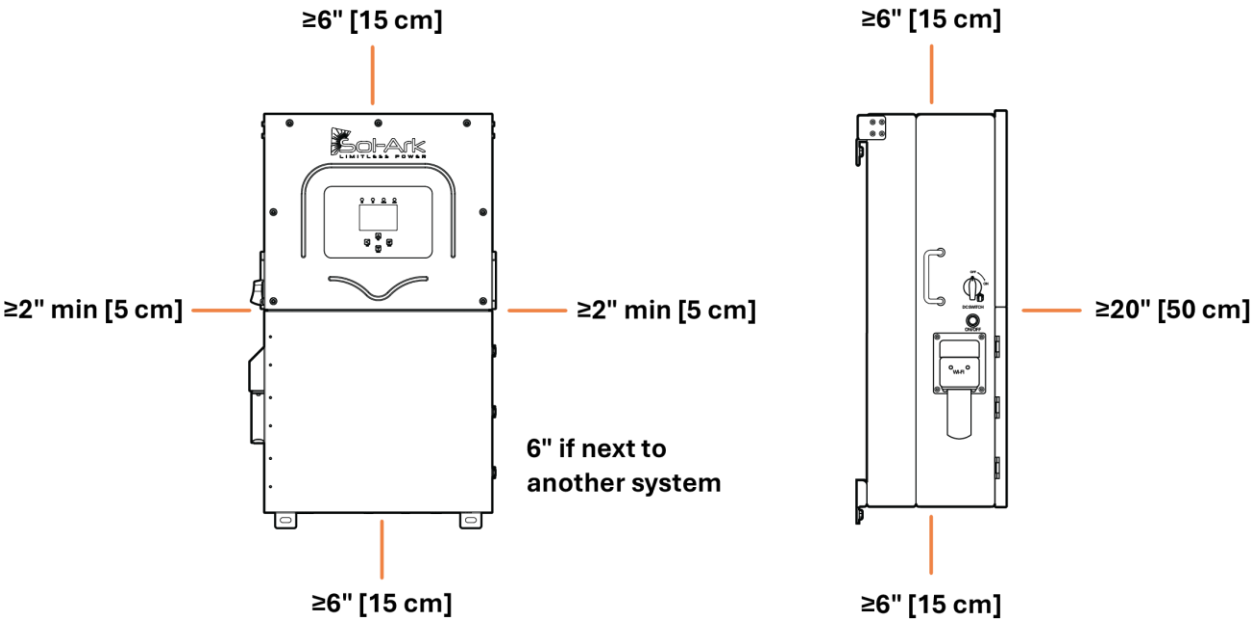

Inverter Clearances Overview

NOTE: Inverter has a Maximum Heat Dissipation of 2,100W or 7,165BTU/hour.

B. Under certain conditions, the National Electrical Code® specifies greater clearances. Use the clearances listed in the National Electrical Code®, paragraph 110.26 and Canadian Electrical Code® CSA C22.1.

C. The Sol-Ark 60K-3P-480V is a NEMA 3R - IP65 enclosure rated for outdoor installation, but it can also be installed indoors.

Copyright © 2026 Sol-Ark LLC

More Information

Mounting the Sol-Ark (Step 4 Details Continued)

D. Use screws or anchors suitable for the support surface and capable of supporting the weight of the inverter (176 lb / 80kg).

- For Concrete or Masonry Mounting: Use a minimum of four M12x60mm expanding anchors (included).
- For Wood Frame Mounting: Use a minimum of four ½-in lag screws with flat washers (not included), making sure to anchor into at least 2 framing members.
- For Metal Framing Mounting: Use a minimum of four ¼-in self-tapping metal screws with flat washers (not included).
  - If you need a different anchorage, calculate the number of anchor points needed to properly hold the weight of the equipment.
  - Secure the inverter to the French Cleat with six of the provided M4x12mm socket head screws.

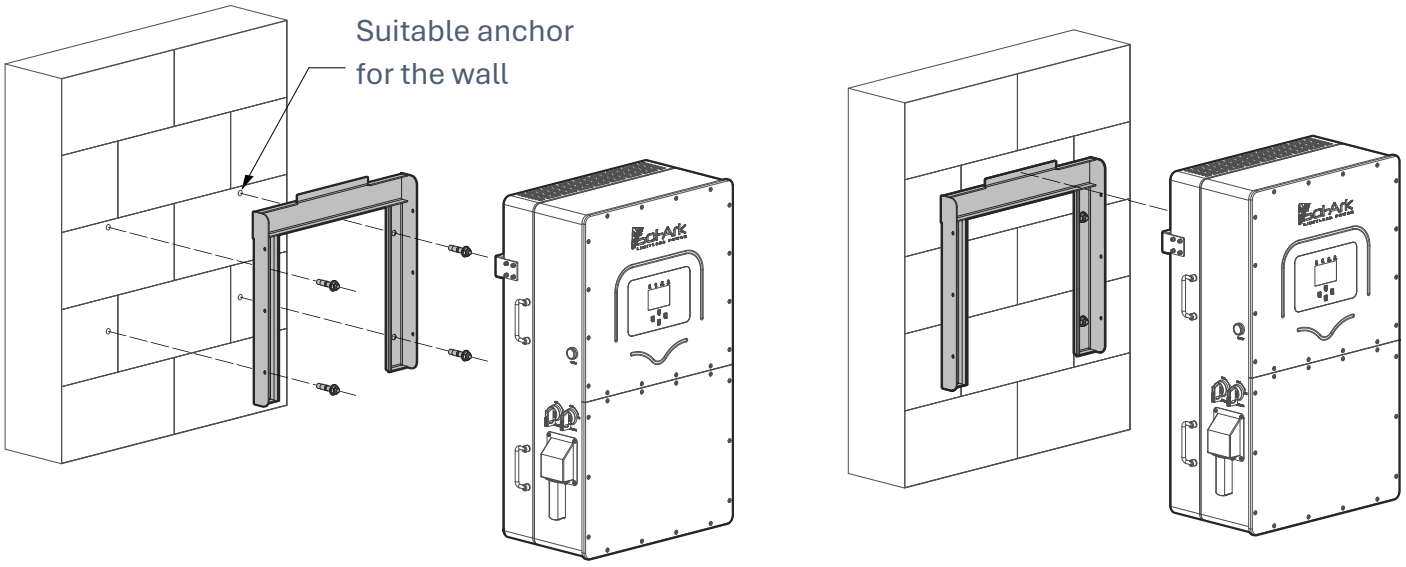

Inverter Mounting Diagram

NOTE: Damage to the LCD Screen due to direct sunlight exposure will not be covered by warranty.

More Information

Mounting the Sol-Ark (Step 4 Details Continued)

Mount the inverter in the optimal orientation as shown below.

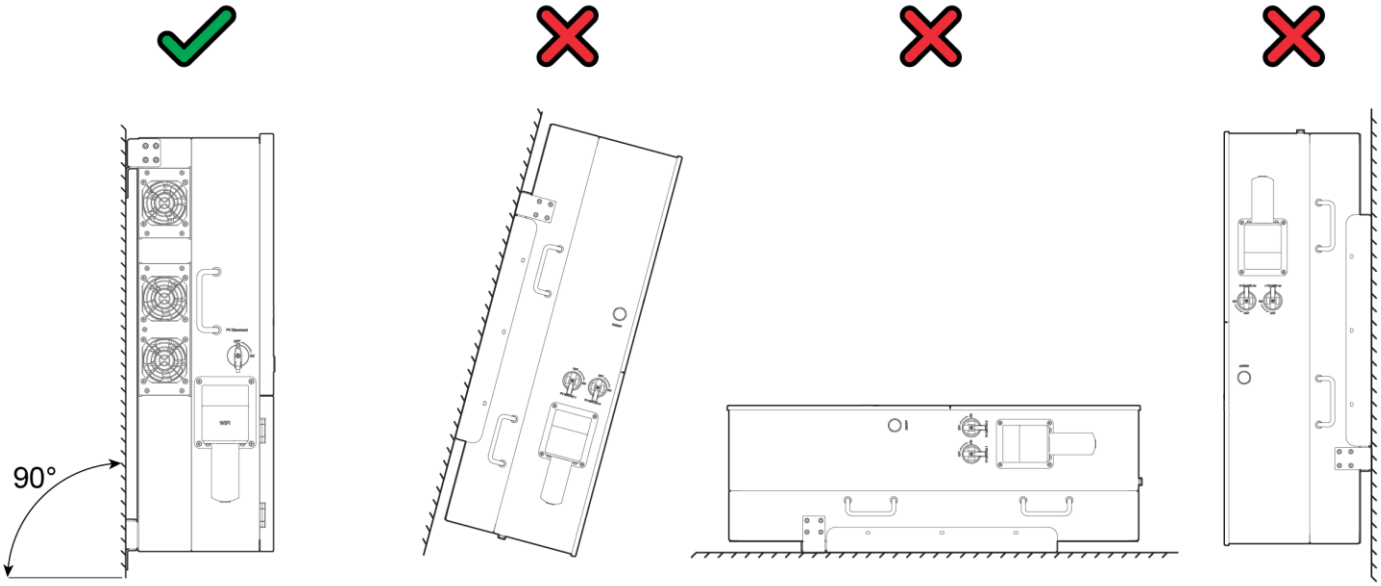

➢ Click here to return to **Step 4.** Mount inverter to surface with proper hardware.

Copyright © 2026 Sol-Ark LLC

More Information

Inverter General Description (Step 5 Details)

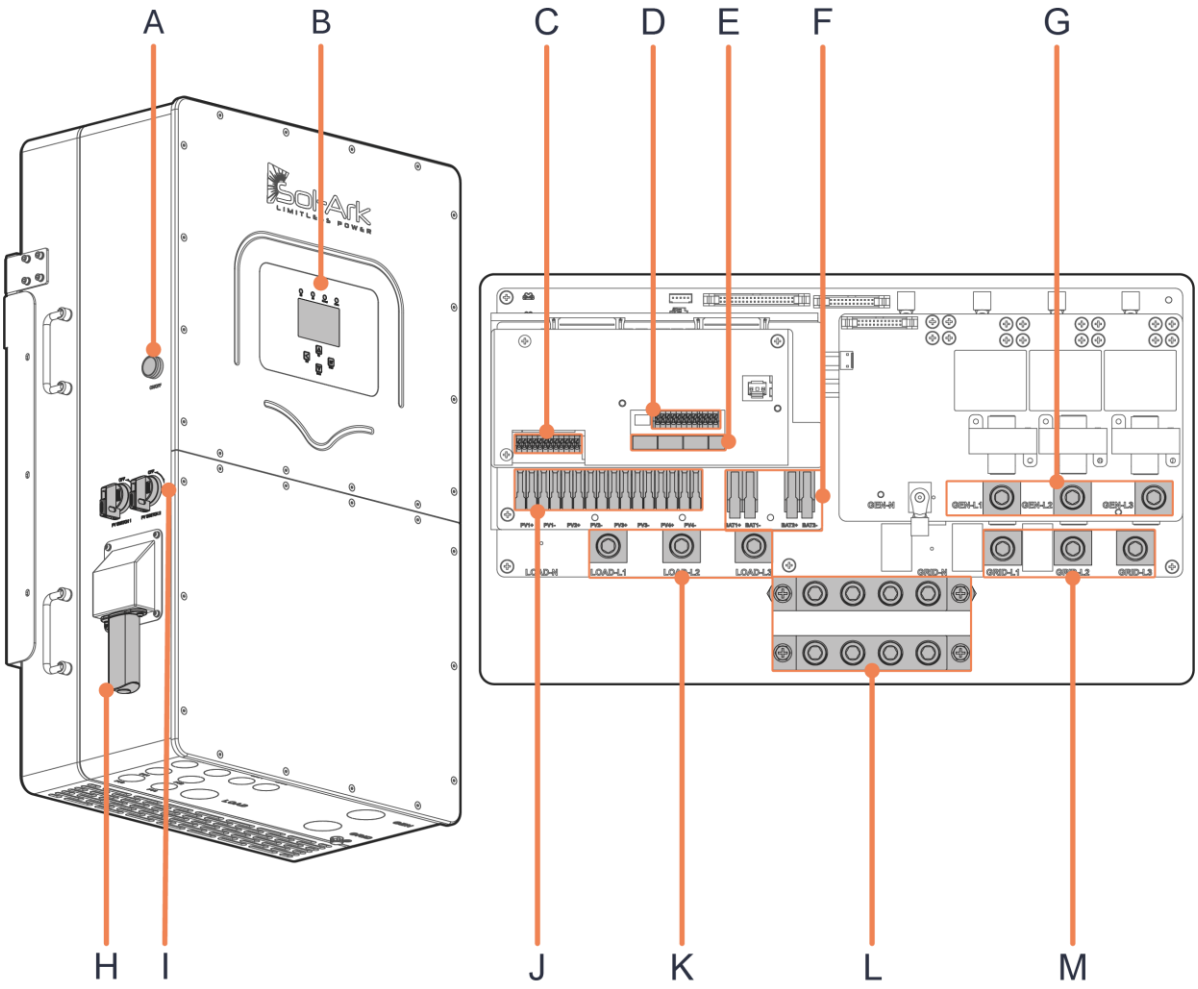

Component	Name	Component	Name
A	ON / OFF Button	H	Wi-Fi / Ethernet Gateway
B	LCD touch screen	I	2x PV DC disconnects
C	CN1 - Terminal block for sensors and accessories	J	4x MPPT inputs terminals
D	CN2 - Terminal block for sensors and accessories	K	(200A) LOAD terminal
E	Communication Ports	L	NEUTRAL / GROUND Busbars
F	2x (50A) Battery port	M	(200A) GRID terminal
G	(200A) GEN terminal		

➢ Click here to return to Inverter Wiring.

More Information

External CT Sensors (Step 5 Details Continued)

CN1 Board

A. Determine if applicable to installation
   - Use if system has non-backed loads upstream
   - Use if **Peak Shaving** will be enabled
   - Use for multi-inverter installation
   - Not necessary for whole system backup
   - Not necessary for off-grid unless peak shaving a backup generator into grid port

B. Pins 1 – 6 for CTs with 5A > Input > 1A from specifications

C. Pins 7 – 12 for CTs with 50mA > Input > 10mA from specifications

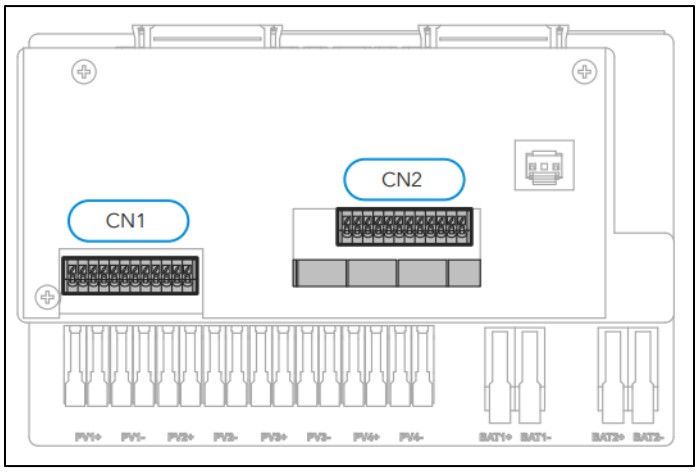

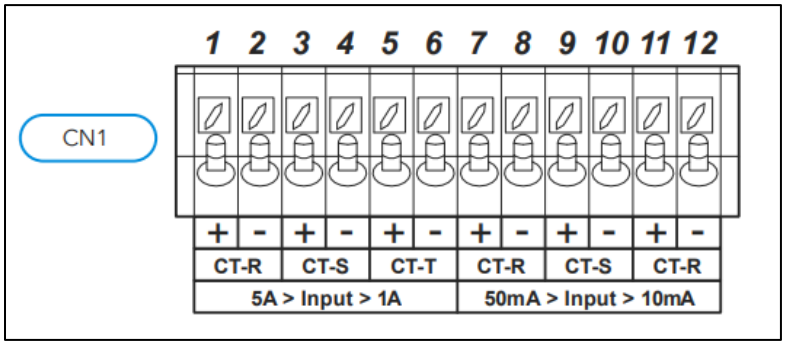

➢ See the *60K Installation Manual* for more on the CT sensors board.

Copyright © 2026 Sol-Ark LLC

More Information

External CT Sensors (Step 5 Details Continued)

CN1 Board (Continued)

A. Confirm CTs are sized appropriately for amperage of service used
B. Determine the distance from CT placement to CN1 sensor board input in case an extension is needed
C. Install CTs between meter and line side tap
D. If using a generator, install CTs between the generator and Sol-Ark inverter AC input
E. Verify correct A, B, and C phase from the AC power source before clamping the CTs
F. Make sure CTs are oriented correctly, with the arrow facing away from Meter or Generator
G. Check HM values on detailed volt screen to ensure correct power readings

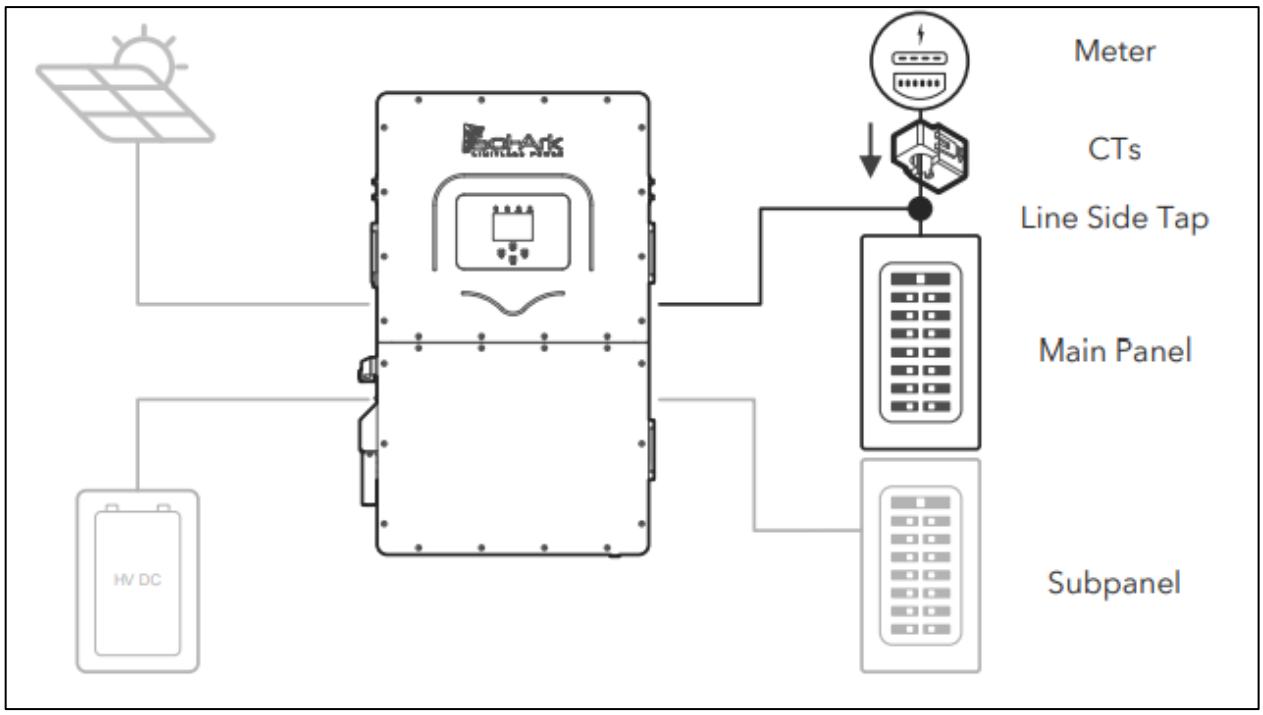

➢ See the *60K Installation Manual* for more information on external CTs.

More Information

External CT Sensors (Step 5 Details Continued)

Wiring the CT Sensor

Make sure to use correct pin out for external CT wiring. Confirm on the detailed voltage screen that power flow is correct by reviewing the HM values for each phase. Positive (+) value are power being imported, and negative (-) indicates power being exported.

- Connect CT1 of line L1 to pins 1 (white) & 2 (black) of CN1 pin board.
- Connect CT2 of line L2 to pins 3 (white) & 4 (black) of CN1 pin board.
- Connect CT3 of line L3 to pins 5 (white) & 6 (black) of CN1 pin board.
- Keep the wires twisted (white-black) throughout the connection.
- If the wires need to be extended, use CAT 6 (shielded) cable to make an extension.

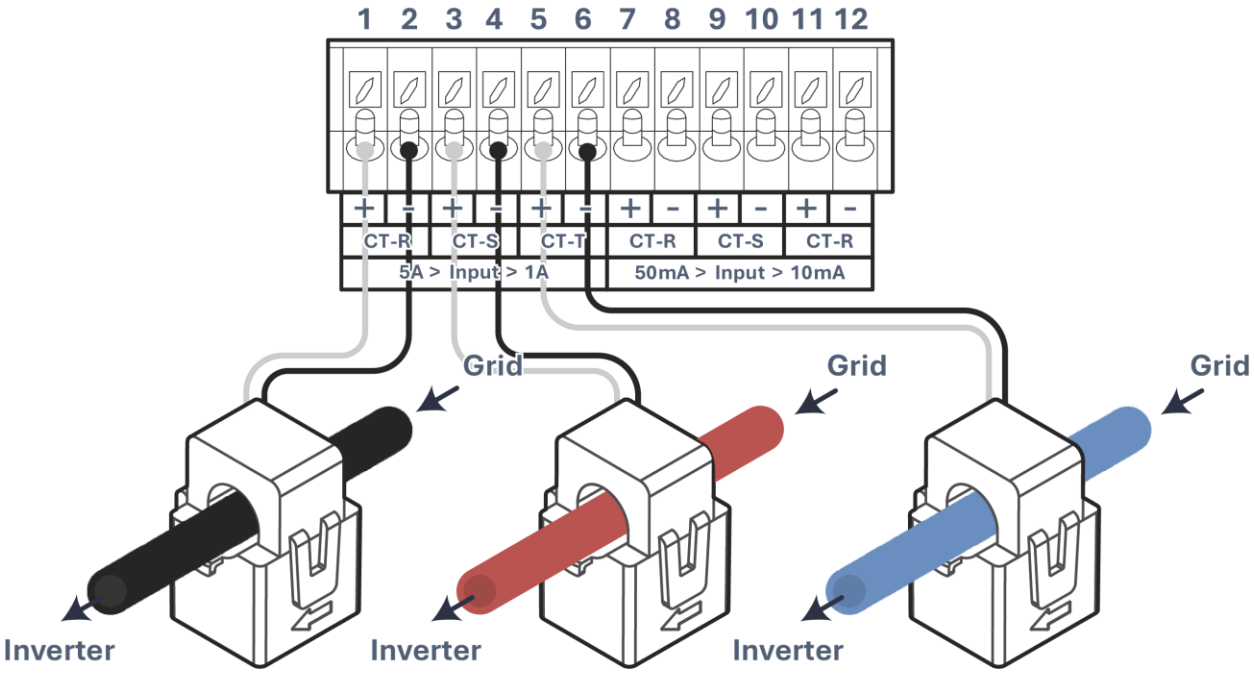

Copyright © 2026 Sol-Ark LLC

More Information

Automatic Generator Start (Step 5 Details Continued)

CN2 Board

If applicable, use pins 1 and 2 for generator auto-start:

- Dry contact relay that is Normally Open (NO)
- **Start V** or **Start %** is the condition that must be met to automatically turn on the generator.
- Optional battery setting **Gen Force** is recommended to test the generator's 2-wire start functionality
- Do NOT induce power through these pins or non-warranty damage may occur

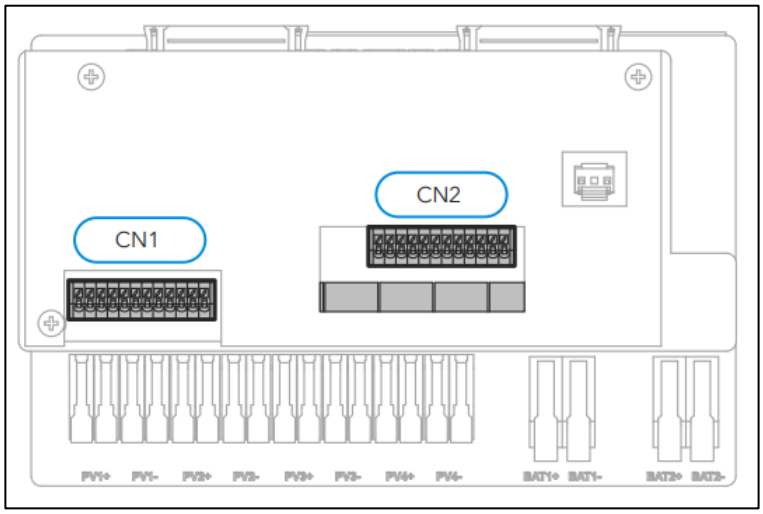

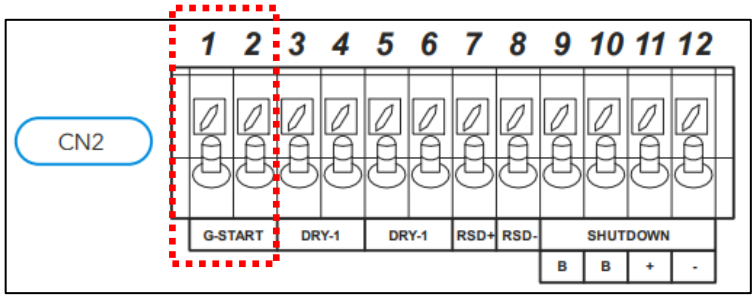

More Information

Rapid Shutdown (Step 5 Details Continued)

External CT Sensors – CN2 Board (Continued)

A. Rapid shutdown compliance requires using pins 9 and 10 to initiate emergency stop of the system when activated.

- **NO** (Normally Open) circuit that initiates when continuity (push button activated)
- Causes loss of voltage on **LOAD** output, loss of 12Vdc on pins 7 and 8, and PV voltage

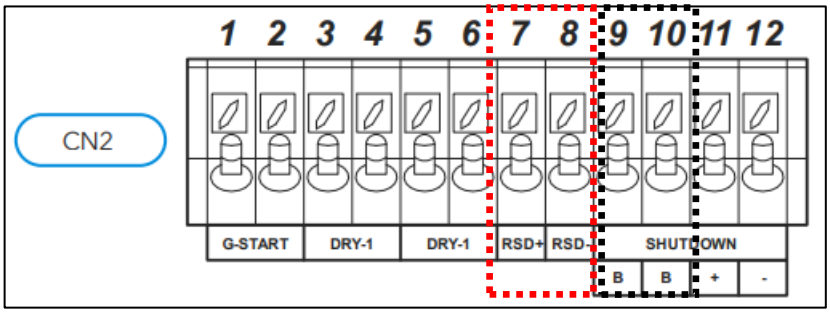

B. Optional 12Vdc supply energize rapid shutdown transmitter using pins 7 and 8.

- 100mA limit for sensor pins so must verify specifications of transmitter current
- If >100mA required, then energize transmitter of a circuit on **LOAD** output (may require 120Vac to 12Vdc power supply)

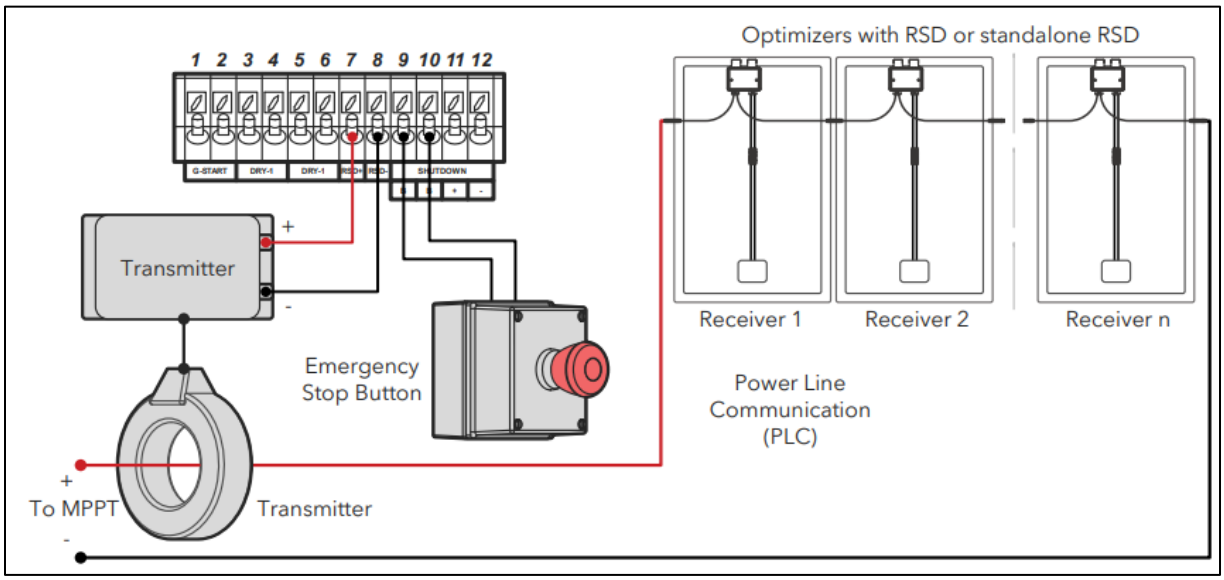

Copyright © 2026 Sol-Ark LLC

More Information

Installing Filter Rings (Step 5 Details Continued)

If your 60K Sol-Ark inverter came with a set of filter rings (toroids), follow these steps to install them on the battery conductors. The filter rings include:

- **2 small white filter rings** for BMS1 and BMS2 communications cable (outside diameter 33mm)
- **1 large black filter ring** for AC wires (outside diameter 65mm).

Make sure that both (+) and (-) wires pass through both filter rings simultaneously. When there are 4 wires, all conductors must go through the filter rings as described below.

Step 1: Install small white filter rings on BMS1 and BMS2

- Thread the end of the BMS communication cables through one filter ring, then wrap the wires around the ring four times. Place the filter ring near the wiring terminals.
- Repeat this for the other BMS communication cable if you are using two BMS ports.

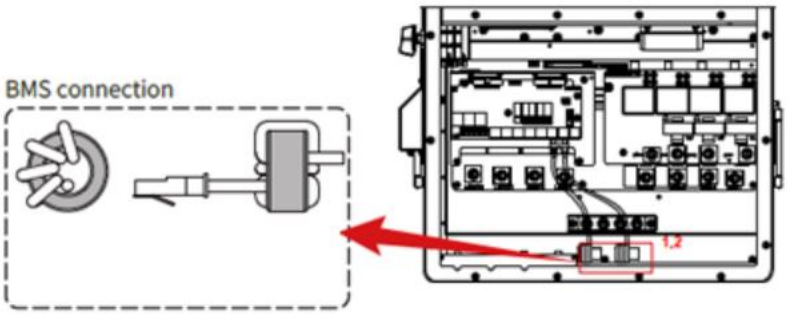

Step 2: Install large black filter ring on GRID terminals

- Thread the wires through the filter ring and THEN connect the wires to the **GRID** port.

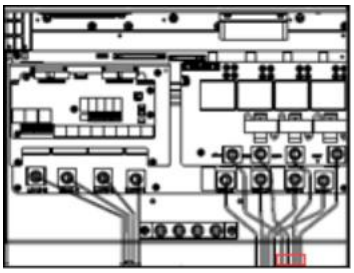

➢ Return to **Error! Reference source not found.**

More Information

Connection Requirements (Step 6 Details)

AC/DC Connection Requirements

All wire runs should be sized to be at or below a 2.5% voltage drop at full load. Equipment wire sizing must comply with the NEC or local electrical code.

Port	Max. Terminal Rating	Temperature Rating	Terminal Wiring Size Range (Min/Max)
RID	200Aac	105C	2AWG – 4/0 AWG
LOAD	200Aac	105C	2AWG – 4/0 AWG
GEN	200Aac	105C	2AWG – 4/0 AWG
MPPT	55AIsc	105C	12 – 10 AWG
Battery Port A	50Adc	105C	6 – 4 AWG
Battery Port B	50Adc	105C	6 – 4 AWG

Sensors and Communications Requirements

Component	Wire Size Range	Max Distance
CT Sensor	16 - 23 AWG	0’ – 10’ [3 m]: 16 AWG included 10’ – 50’ [15.3 m]: 14AWG twisted pair extension
Communications	24 – 23 AWG	0’ – 100’ [30 m]: 24 AWG 100’ – 400’ [120 m]: 23 AWG
RJ45 Parallel Communication	CAT 5E or better	0’ – 7’ [2.1 m]: Included 7’ – 20’ [6m]: Extendable

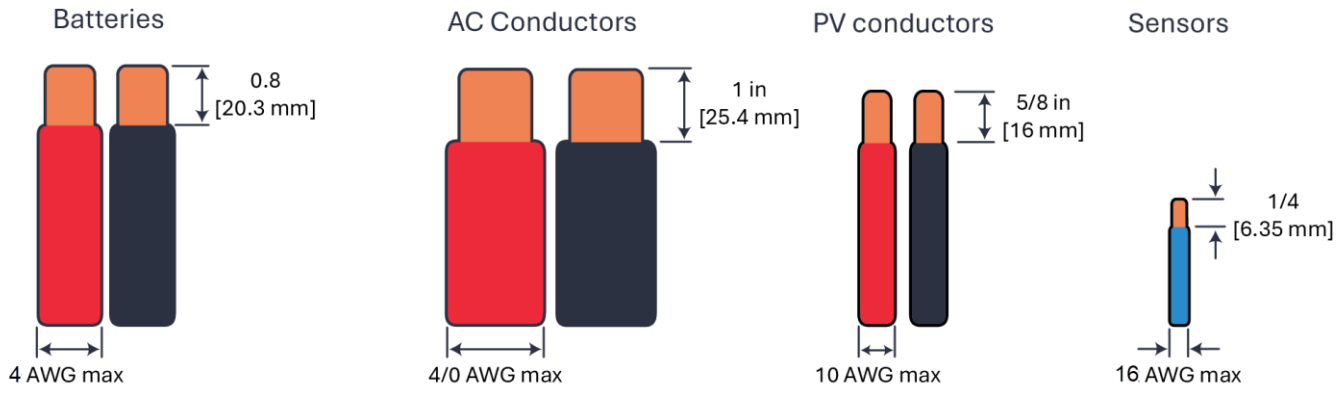

Copyright © 2026 Sol-Ark LLC

More Information

Connection Requirements (Step 6 Details Continued)

Fastener Torque Table

NOTE: Do not use impact drivers to tighten any fasteners on the inverter.

Terminal / Breaker	Torque [ft-lb]	Torque [Nm]
LOAD	18.75 ft-lb	25.5 Nm
GRID	18.75 ft-lb	25.5 Nm
GEN	18.75 ft-lb	25.5 Nm
Neutral / Ground (Busbar)	18.75 ft-lb	25.5 Nm
Cover Screws	15.5 in-lb	1.75 Nm
Battery Terminals	Push-in Cage Clamp	Push-in Cage Clamp

➢ Click here to return to **Step 6.** Check wiring area.

More Information

Battery Communications (Step 10 Details)

- The inverter must be OFF while you connect the batteries.
- Be sure that the external battery disconnect is OFF or arcing may occur. If your battery bank does not have a built-in disconnect, maintain the necessary safety measures when handling the connections.
- The 60K-3P-480V reaches a max battery charge/discharge of 50A per terminal for a total max of 100A if using both sets of battery terminals. If only one set of terminals is used, the battery charge/discharge will be limited to 50A.

NOTE: The 60K-3P-480V is a HIGH VOLTAGE BATTERY system. You MUST NOT exceed 700VDC as shown below. The HV battery must stay within the 160VDC - 700VDC operating voltage range. DO NOT connect to any battery whose max voltage exceeds this limit.

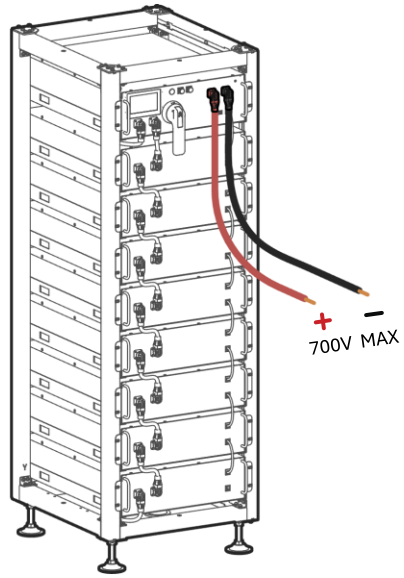

Single HV battery

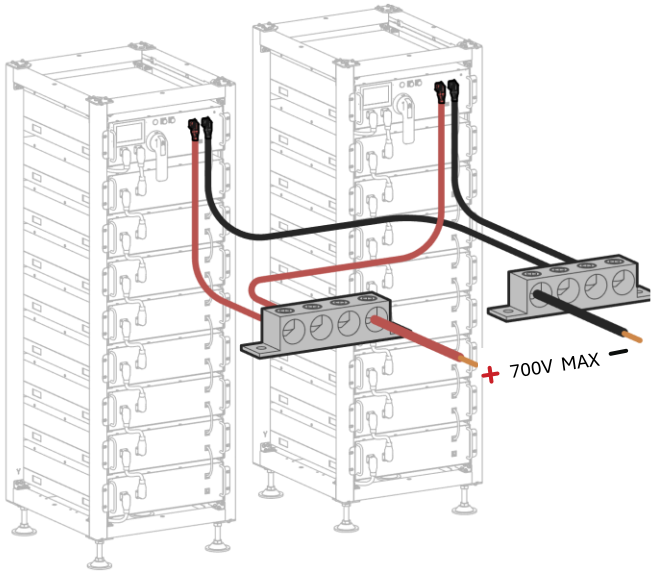

Bank of multiple HV batteries

Battery Wiring Output

Copyright © 2026 Sol-Ark LLC

More Information

Battery Communications (Step 10 Details Continued)

The Sol-Ark inverter has two input battery terminals for single or dual battery connections. To wire a battery to the inverter, lift the actuation levers and insert the 6-4 AWG battery conductor fully into the terminal. DO NOT force open the battery actuation levers more than 90°.

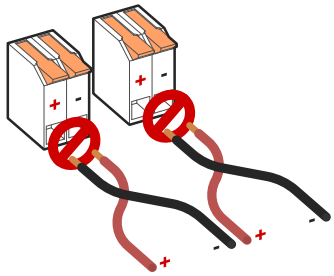

DANGER: Reverse Polarity

DO NOT reverse the battery input wires: the system will be damaged, and the warranty voided.

Multi-Terminal Installation

The two battery input terminals of the 30K can be configured for parallel battery stacks in settings screens. If the charge/discharge rate of 100A is needed, the battery must be connected to both input terminals. If connecting more than one battery to a single inverter input terminal, you must use an external busbar or combiner to combine batteries positive and negative outputs before connecting to the inverter terminals.

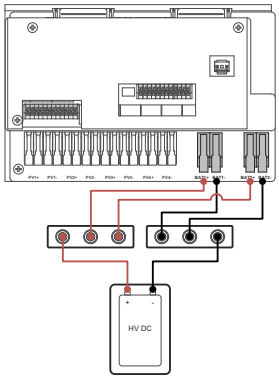

Single battery

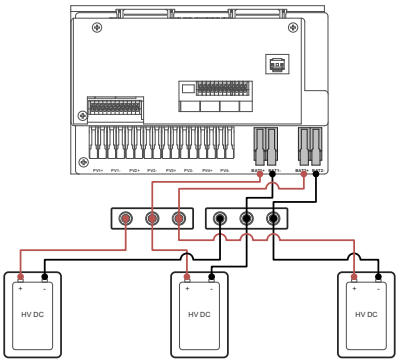

Parallel battery bank

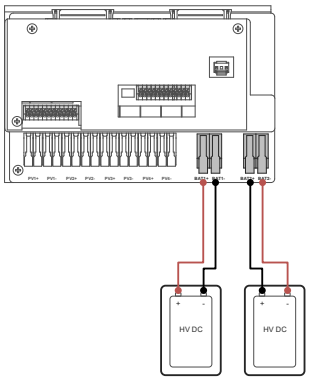

Dual battery bank

NOTE: If a single battery is capable of charge/discharge currents above 50A, connect the battery to both input terminals. Otherwise, the charge and discharge rate will be limited to 50A max. Only connect batteries of the same model to the terminals.

More Information

Battery Communications (Step 10 Details Continued)

Parallelled Battery Installations

NOTE: Multi-Inverter Installations
Contact Sol-Ark Technical Support at +1 (972) 575-8875, ext. 2 for help with commissioning multiple paralleled inverters.

- ALL systems MUST be connected to their own battery bank, and the battery banks must be the same size.
- DO NOT parallel batteries between inverters.

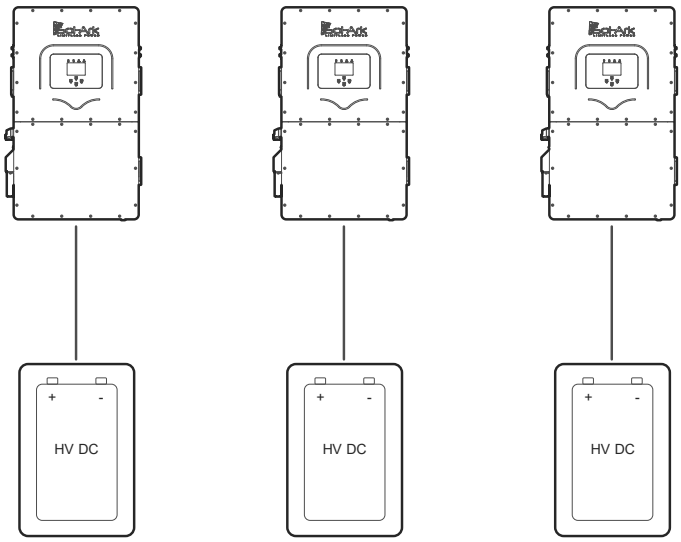

Inverter to Battery Ratio

The 30K inverter can establish closed-loop battery communication through one or two separate RJ-45 ports labeled BMS1 and BMS2. Communication with battery BMS will depend on the wiring of the battery bank and the wiring to the Sol-Ark inverter.

The following two methods show how communications can be established.

Copyright © 2026 Sol-Ark LLC

More Information

Battery Communications (Step 10 Details Continued)

Single Battery Bank Communication

A. Configure and wire the HV batteries so that there is one battery bank with a single communication source

B. Establish Closed-loop communication by connecting the com cable to the BMS1 port of the Sol-Ark inverter

- ☑ **Parallel Bat1&Bat2** setting on the **Batt setup** menu MUST be enabled and batteries must be connected in parallel on the DC side

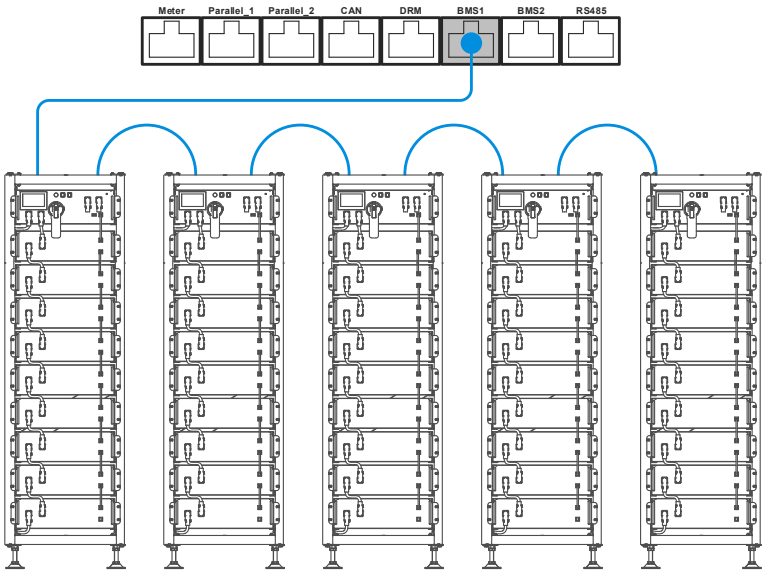

Single battery bank communication

- **Parallel bat1&bat2**: Must be checked when using both battery inputs for the same battery bank. When this check box is enabled, the inverter will expect a single battery communication source.

More Information

Battery Communications (Step 10 Details Continued)

Separate Battery Banks Communications

A. Configure and wire the HV batteries so that there are two battery banks, each with their separate communication source.

B. Establish closed-loop communications by connecting each communication cable to a BMS port of the Sol-Ark (BMS1 and BMS2).

NOTE: Do NOT enable the **Parallel Bat1&Bat2** setting on the **Batt Setup** menu.

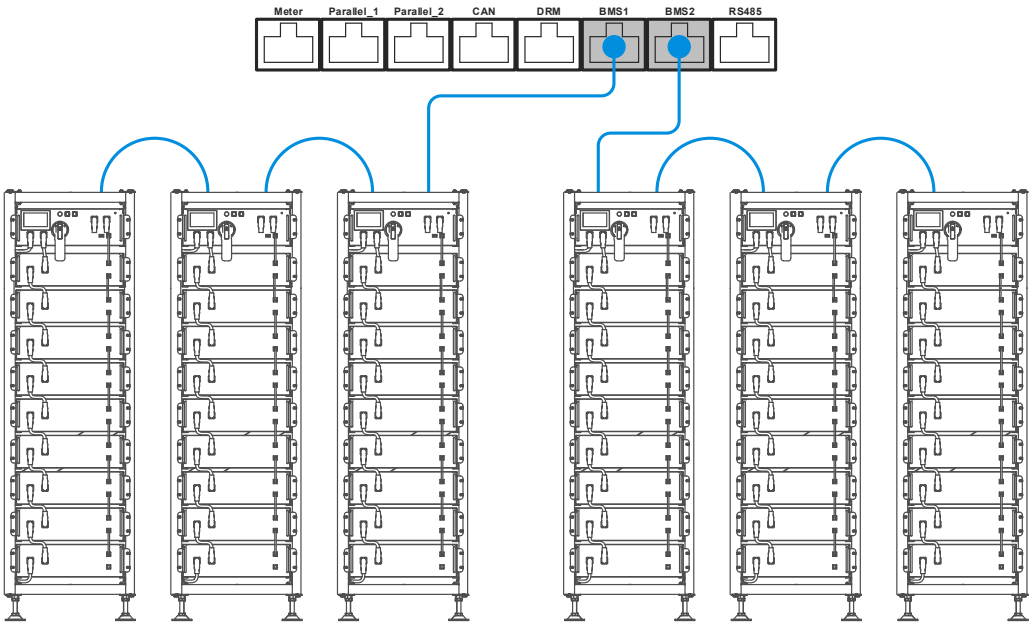

Multi-Battery Bank Communications

Copyright © 2026 Sol-Ark LLC

More Information

Battery Setup (Step 11 Details)

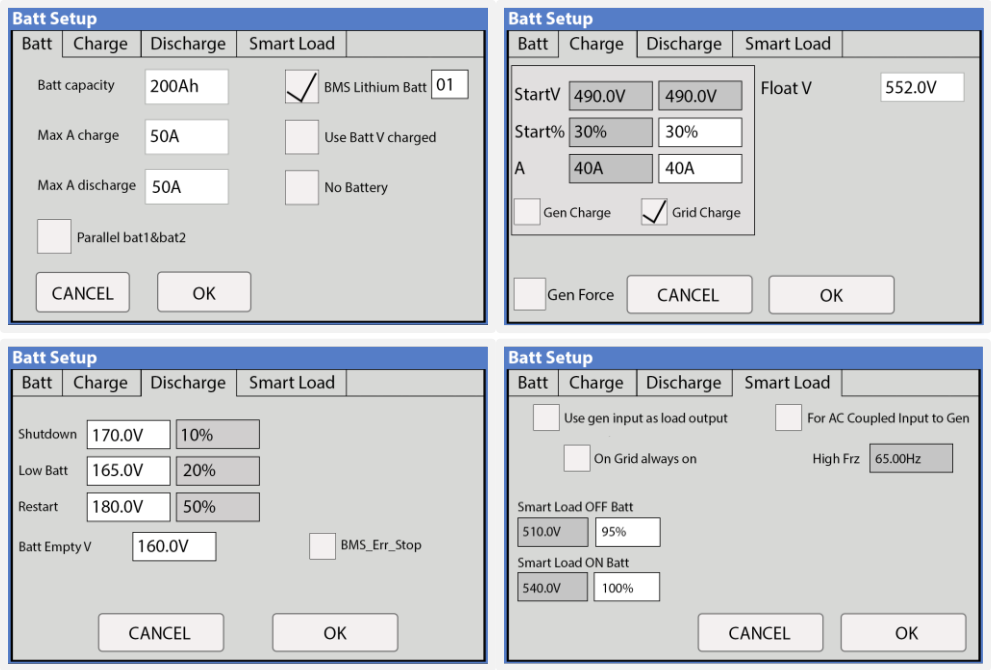

Batt

Batt Capacity: Specifies the capacity of the battery bank in Amp Hour (Ah).

- Batteries in series → Voltage adds up (V).
- Batteries in parallel → Capacity adds up (Ah).

Max A Charge: Sets the maximum charge current (A) rate to the batteries when charged from solar power → 50 max allowed. 100A max total if using both battery terminals.

Max A Discharge: Sets the maximum discharge current (A) rate from the batteries → 50 max allowed. 100A max total if using both battery terminals.

For off-grid systems, the battery bank will discharge 120% of this value for a peak of 10 seconds before the inverter shuts down to prevent battery damage.

More Information

Battery Setup (Step 11 Details Continued)

BMS Lithium Batt: Enables closed communications with lithium batteries. Specify Serial Number (00, 01,02, ...) according to communication protocol.

Use Batt V Charged: Displays battery charge in terms of voltage.

Use Batt V Charged: Displays battery charge in terms of voltage.

Parallel bat1&bat2: Must be checked when using both battery inputs for the same battery bank. When enabled, the inverter will expect a single battery communication source.

Charge

Float V: Lower steady voltage at which the battery is maintained after being fully charged. Set according to manufacturer specs.

Gen Charge: Uses the **GEN** AC source to charge the battery bank.

Start V: Voltage at which the system will auto-start and allow a generator or AC source to charge the battery.

Start %: SOC at which the system will auto-start and allow a generator or AC source to charge the battery.

A: Maximum rate of charge to the batteries (per terminal) from the generator or AC source (DC amps). Set value according to the generator size.

Copyright © 2026 Sol-Ark LLC

More Information

Battery Setup (Step 11 Details Continued)

Grid Charge: There are two scenarios in which this option is used:

- **Grid connected to Grid input:** The inverter will limit the charge rate to the set value in **A** and the battery will charge to 100% SOC.
- **Generator connected to Grid input:** You must select the check box ☑ **GEN connect to Grid input**. The system will use **Start V**, **Start%** and **A** conditions to charge the battery and stop charging at 95% SOC.

  NOTE: Adjustable upper limit if **Time of Use** is enabled.

Gen Force: Test function for generator auto-start. Enable and press OK to close normally open relay (CN2, pins 1,2) and force the generator on. Disable and press **OK** to disengage. The generator will not provide power during this test if grid power is available.

NOTE: The gen must be in automatic mode if applicable and must have a two-wire start (dry-contact, normally open) connected to the Sol-Ark.

More Information

Battery Setup (Step 11 Details Continued)

Discharge

Shutdown: Battery voltage or % at which the inverter will shut down to protect the battery from an over discharge situation (battery symbol on the home screen will turn red).

Low Batt: Low battery voltage or % (battery symbol on the home screen will turn yellow). Stopping point for TOU.

Restart: Battery voltage or % at which AC output will resume after previously reaching shutdown.

Batt Empty V: Sets the empty voltage and associates this voltage to 0% SOC. This value determines the lowest % SOC limit.

BMS_Err_Stop: Enables system stop when there is loss of battery communications.

Copyright © 2026 Sol-Ark LLC

More Information

Battery Setup (Step 11 Details Continued)

Smart Load

A. This mode uses the **GEN** input as a load output that delivers power when the battery exceeds a user programmable threshold or when the Sol-Ark is connected to the grid.

B. When ☑ **Use gen input as load output** is enabled, the **GEN** input turns into an output to power high-power loads such as a water heater, irrigation pump, AC unit, pool pump, or any other load.

C. When ☑ **On Grid always on** is enabled, the **GEN** terminal will always output power as long as the grid is connected, regardless of battery charge.

- **Smart Load OFF Batt:** Battery voltage or % at which the **GEN** terminal will stop outputting power.
- **Smart Load ON Batt:** Battery voltage or % at which the **GEN** terminal will start outputting power.
- **Solar Power (W):** Amount of PV production needed before **GEN** terminal starts outputting power.

More Information

Battery Setup (Step 11 Details Continued)

AC Coupling Settings - (For AC Coupled Input)

A. Grid-tied systems with AC coupled solar arrays must have the ☑ **Grid Sell** check box enabled. Be sure you are allowed to sell back to the grid.

B. To use the **GEN** terminal as an AC coupling input for micro inverters or string inverters, enable the check box ☑ **For AC Coupled Input to Gen.**

C. In off-grid systems, the Sol-Ark will use frequency shifting to control the AC coupled solution based on the battery SOC.

   The meaning of **Smart Load OFF Batt** and **Smart Load ON Batt** will change in this mode.

   - **Smart Load OFF Batt:** The % SOC at which the AC coupled inverters turn OFF. **90% recommended**.
   - **Smart Load ON Batt:** The % SOC at which the AC coupled inverters turn ON. **80% recommended**.

Copyright © 2026 Sol-Ark LLC

More Information

Connecting PV Modules (Step 12 Details)

NOTE: The Sol-Ark 60K-3P-480V has 4 independent MPPTs that support up to 2 PV strings each. MPPTs can handle a maximum VOC of 1,000 V and an ISC of 55A but will self-limit and operate at Imp of 36A max.

A. Max DC solar input = 78 kW (± 5%) | Max input power per MPPT = 19.5 kW | Max recommended input voltage per MPPT = 850 VOC | Max input current per MPPT = 36A (self-limiting).

B. Design for an input current of 36A per MPPT. The inverter will self-limit beyond 36A. If ISC exceeds 55A, damage will occur.

C. PV Source Circuit max voltage of 1,000 VOC; damage can occur with PV strings whose open-circuit voltage exceeds 1,000 VOC

   NOTE: Strings in parallel on the same MPPT must have the same designed open-circuit voltage (Voc), otherwise the system will be limited to the lowest string voltage.

D. PV1 A/B must have the same Voc.

E. If the solar panels are oriented in different directions and connected in the same MPPT, there will be a loss in PV efficiency.

   NOTE: Per NEC Art 690.43, exposed non-current-carrying metal parts of PV module frames, electrical equipment, and conductor enclosures of PV systems shall be connected to an equipment grounding conductor. All grounding conductors and grounding electrodes should be installed according to NEC Art 690.47 or as required by the AHJ.

F. For ground-mounted arrays, Sol-Ark recommends installing an auxiliary grounding electrode placed near the array to ensure optimal earth-to-ground resistance of the grounding system. This auxiliary electrode would need to follow the requirements of NEC Art 250.54.

More Information

Connecting PV Modules (Step 12 Details Continued)

A. Connect the solar panel strings using either of the following configurations:

"Y" connection

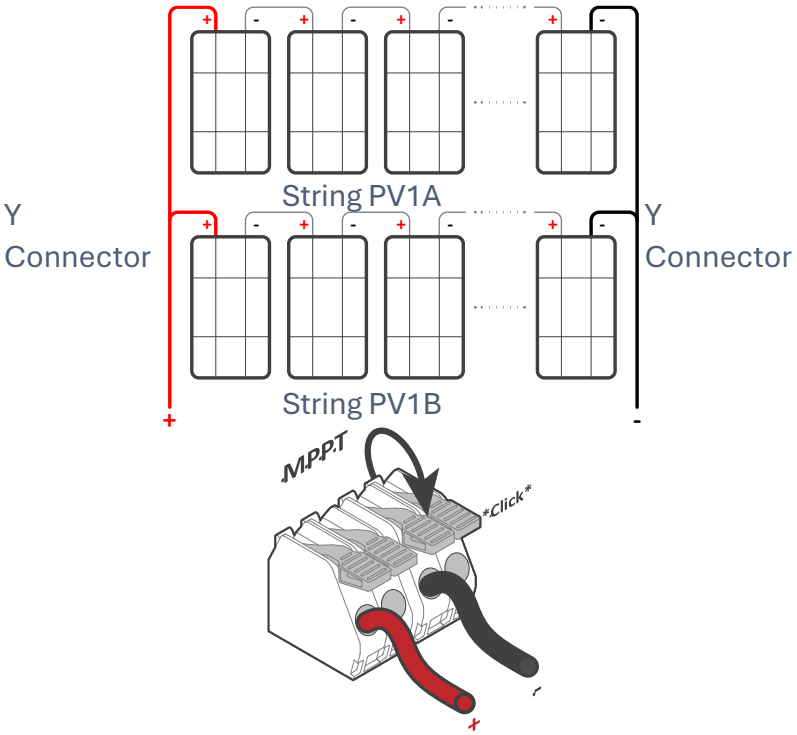

Individual strings

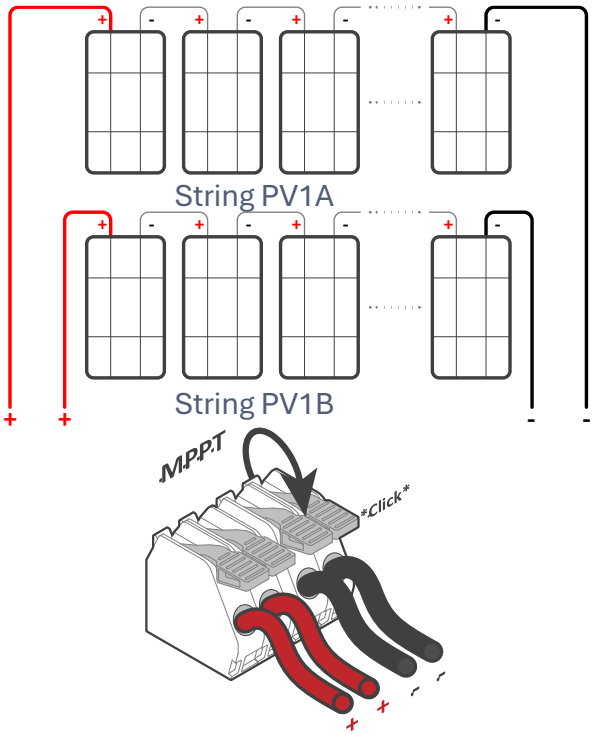

➢ Click here to return to **Step 12.** Check PV Input.

Copyright © 2026 Sol-Ark LLC

More Information

Check Grid Parameters (Step 14 Details)

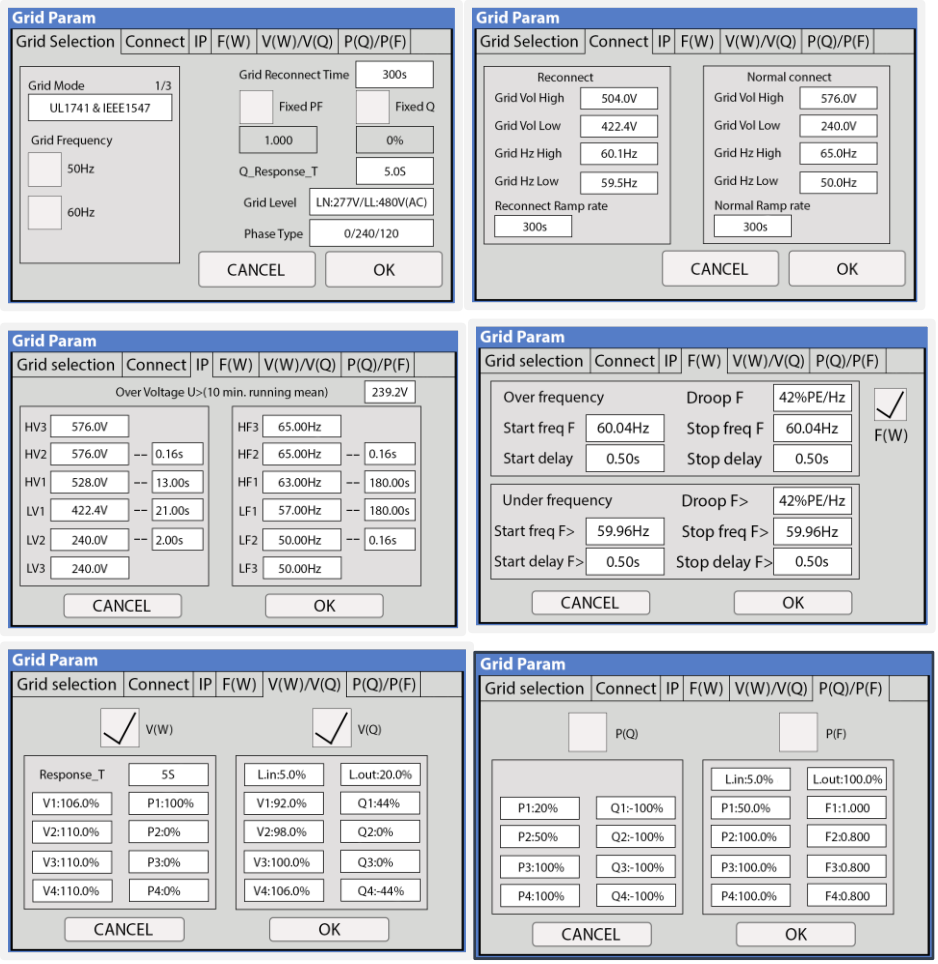

Grid Selection

Grid Mode: Tap and use navigation arrows to cycle through different grid modes:

General Standard: Applies general grid interconnection standards. Enables grid frequency and voltage adjustments. (Useful for off-grid applications with backup generators).

UL1741 & IEEE1547: Applies UL 1741 and IEEE 1547 grid interconnection requirements and standards.

More Information

Check Grid Parameters (Step 14 Details Continued)

CPUC RULE21: Applies California's grid interconnection requirements and standards.

SRD-UL-1741: Applies UL 1741SB grid interconnection requirements and standards.

Grid Frequency: Frequency of the AC sine wave.

Grid Reconnect Time: The amount of time in seconds the inverter will wait before reconnecting to the grid.

Fixed PF: Allows for power factor correction, ±0.8 to 1.0

Fixed Q: Allows for power factor correction based on desired reactive power percentage.

Grid Level: Tap and use navigation arrows to cycle through different nominal grid voltage levels.

NOTE: Grid level must be selected according to nominal grid voltage.

- LN:277VAC LL:480VAC
- LN:230VAC LL:400VAC
- LN:220VAC LL:380VAC

Phase Type: Tap and use navigation arrows to specify phase sequence.

- 0/240/120: Positive sequence A-B-C
- 0/120/240: Negative sequence A-C-B

Copyright © 2026 Sol-Ark LLC

More Information

Check Grid Parameters (Step 14 Details Continued)

Connect

Reconnect: Parameters used to determine an allowable range of frequency and voltages to dictate a reconnection to the grid after initial grid loss. Frequency and voltages must be within these margins during Grid Reconnect Time to allow grid reconnection.

Normal connect: Parameters used to determine an allowable range of frequency and voltages to retain connection to the grid following a reconnect and normal operation.

NOTE: Parameters will be set automatically based on selected grid mode compliance, unless **General Standard** is selected.

- Reconnect Ramp Rate: Reconnection power ramp time in seconds.
- Normal Ramp Rate: Startup power ramp time in seconds.

IP

HV1/HV2/HV3: Overvoltage protection point.

LV1/LV2/LV3: Undervoltage protection point.

HF1/HF2/HF3: Over frequency protection point.

LF1/LF2/LF3: Under frequency protection point.

F(W)

F(W): Enables the use of Frequency-Watt. The Sol-Ark regulates its power output to the grid as a function of the frequency to support grid stabilization during over and under-frequency conditions.

More Information

Check Grid Parameters (Step 14 Details Continued)

Droop F: Percentage of inverter's nominal power increase / decrease per Hertz (Hz).

Start freq F: Frequency at which the inverter will start decreasing active power by the programmed Droop F percentage.

Stop freq F: Frequency at which the inverter will stop decreasing active power by the programmed Droop F percentage.

V(W) / V(Q)

V(W): Enables the use of Volt-Watt. The Sol-Ark regulates active power output to the grid as a function of voltage to support stabilization during over and under-voltage conditions.

V(Q): Enables the use of Volt-VAr. The Sol-Ark regulates reactive power output to the grid as a function of the voltage to support stabilization during over and under-voltage conditions.

V, P & Q: Percentage of nominal grid voltage (V) to which the Sol-Ark will reduce its active power (P) or reactive power (Q).

P(Q) / P(F)

P(Q): Enables the use of Watt-VAr to regulate reactive power output according to programable active power parameters.

P(F): Enables PF regulation according to programmable active power parameters.

NOTE: Follow electrical grid code before changing grid settings.

➢ Click here to return to **Step 13.** Check Grid Parameters.

Copyright © 2026 Sol-Ark LLC

More Information

Test Island Mode (Step 16 Details)

The graphic shows the detailed voltage screen when performing island test.

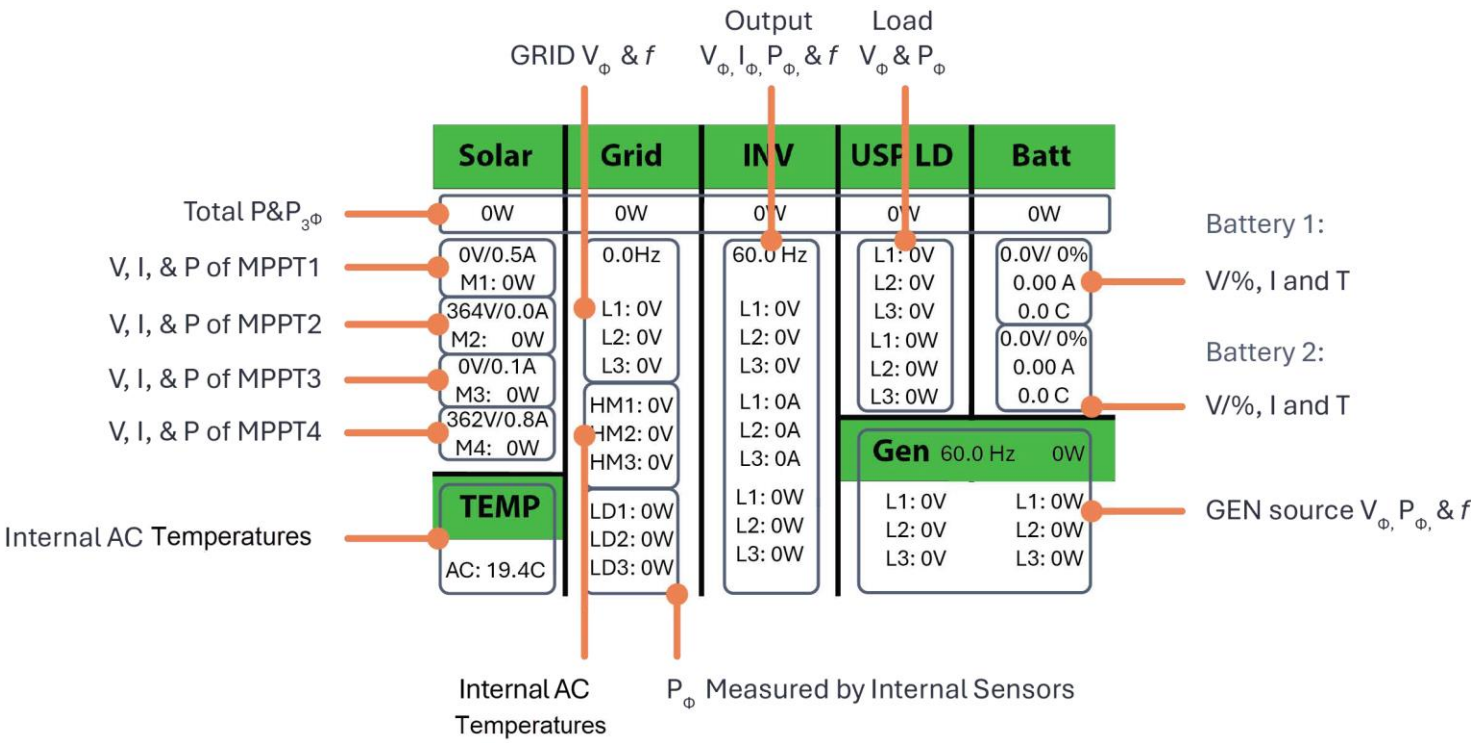

Details screen

➢ Click here to return to **Step 16**: Test Island Mode.

More Information

Alternate Method for Connecting to WiFi using IP Address (Step 17 Details)

You can configure a Wi-Fi network through an IP address.

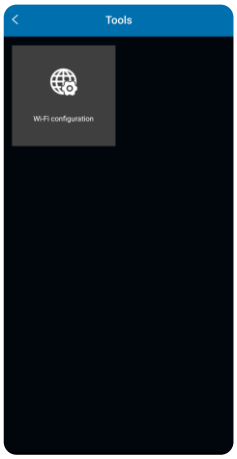

A. On a Smart Phone or Computer, connect to the **EAP-#####** network. Go to: **Settings > Wi-Fi > EAP-##### network**.

B. Type in the password, which depends on the product you received:

   *If you See "**KEY**" printed on the dongle*:
   the 16-digit password is printed there

   If there is no "KEY" printed on the dongle:
   the password is **12345678**

   The **EAP-#####** network contains the last 5 digits of the Dongle serial number. You can find this number on the label.

C. A message such as "**Connected without internet**" appears when the device is connected to the EAP-#####.

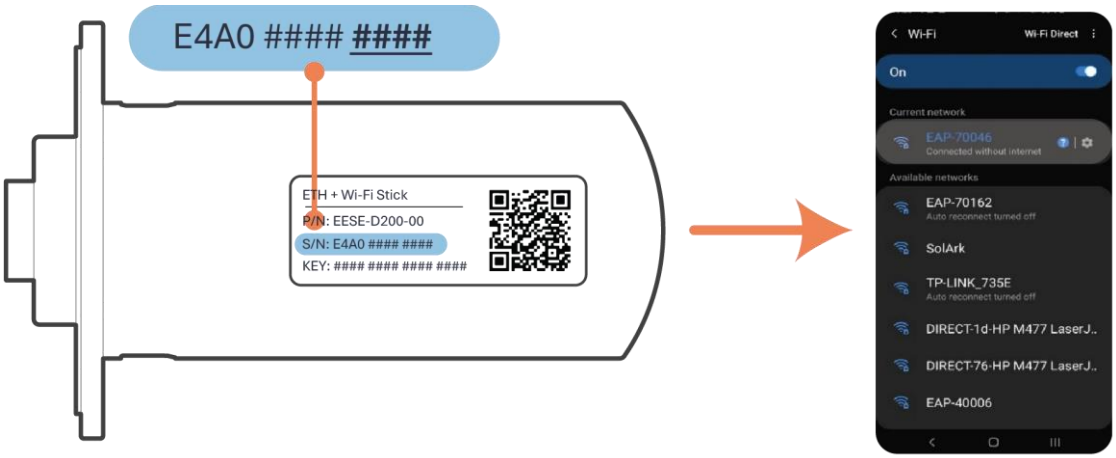

Locating the Dongle Network Name

NOTE: The Wi-Fi dongle does NOT provide internet access. It needs an external internet provider to connect to. The dongle is compatible with Wi-Fi signal broadcasted at 2.4 GHz (it is not compatible with 5 GHz networks).

Copyright © 2026 Sol-Ark LLC

More Information

Alternate Method for Connecting to WiFi using IP Address (Step 17 Details Continued)

A. After you're connected, open an internet browser on the same device, such as Safari, Chrome, Firefox, Edge, or any other browser.

B. On the address bar (http://.....), type the IP address: **10.10.10.1** as shown in the figure below. If you cannot access the configuration page, try again on a different device.

C. Scroll down to the **Wlan Connection** section and tap the **Scan** button to scan for local Wi-Fi networks.

D. Nearby Wi-Fi networks will appear. Select the local network you want to connect to, input your credentials, and tap **Connect**.

E. Once connected, a "Connection Successful" message will appear. Tap the **Save** button next to **Scan** to save settings.

F. Wait about 5 minutes. The dongle will connect to the Wi-Fi network and will then have access to MySolArk.

NOTE: DO NOT connect to the EAP-##### network as that is the Wi-Fi dongle itself. The device does not provide internet access.

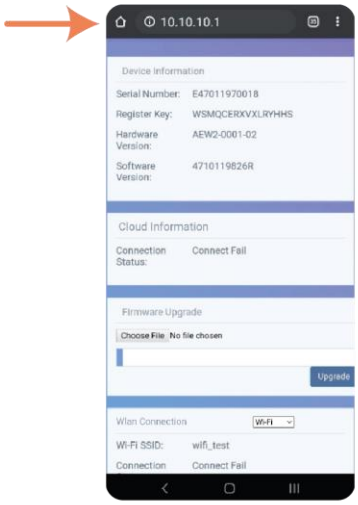

a. Internet Browser IP Address

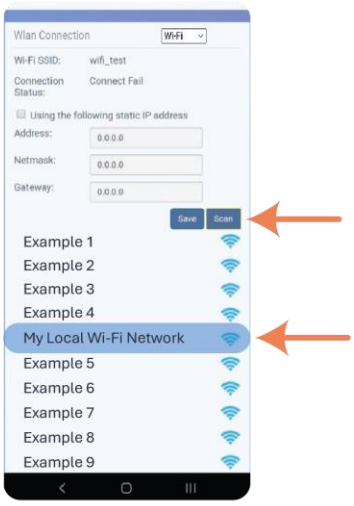

b. Wi-Fi Network Scan

➢ Click here to return to **Step 17.** Connect the Dongle.

More Information

Create a Plant on MySolArk (Step 18 Details)

A. **Download and install the MySolArk app** for Android or Apple smartphones. QR codes are provided below.

Google Play Store	MySolArk	Apple App Store

B. Create a MySolArk account and log in.

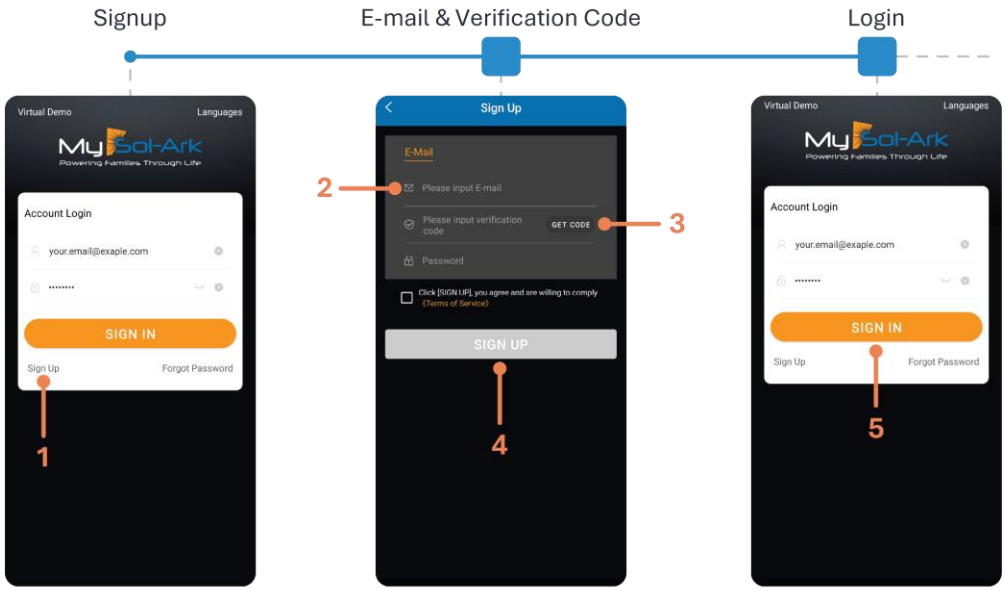

Copyright © 2026 Sol-Ark LLC

More Information

Create a Plant on MySolArk (Step 18 Details Continued)

1. Create the Plant.

For Installers:

a. Create the plant and configure the system before sharing it with the owner.

b. After creating and configuring the plant, the installer can share and grant manager permissions to the owner by navigating to **My Plants → ... → Share → Add Account**.

The homeowner must create their own MySolArk account first.

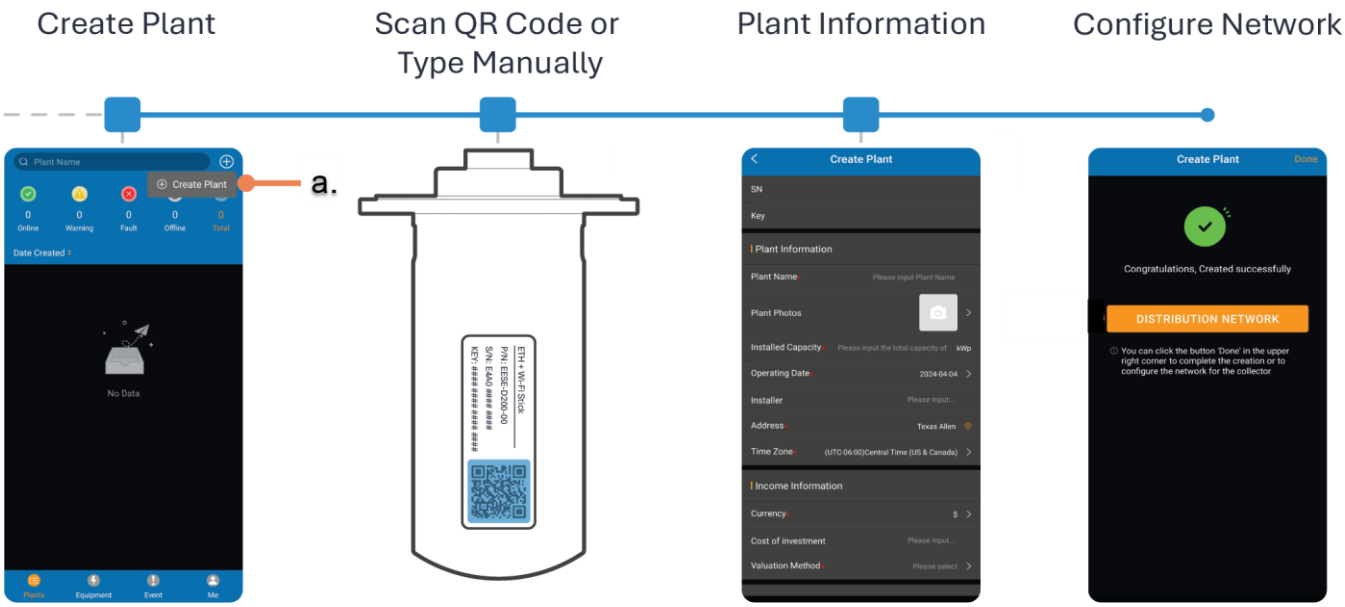

➢ Click here to return to **Step 18.** Create the plant.

More Information

System Work Modes (Step 21 Details)

To access different work modes, go to **System Settings → Limiter tab**.

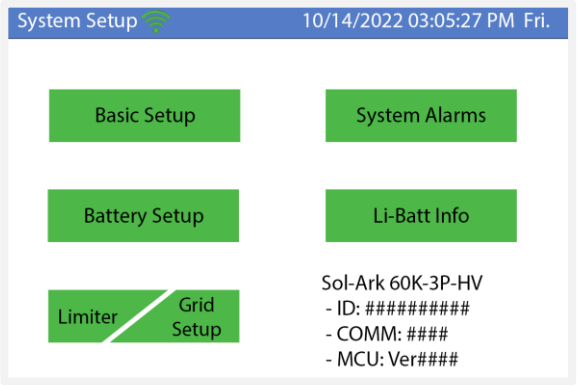

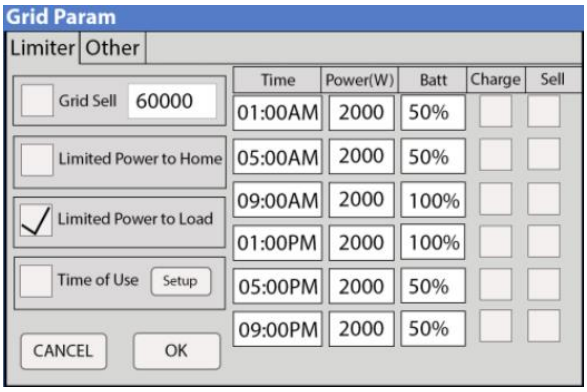

Grid sell

Allows excess produced PV to back-feed GRID input to the utility

- Will not export power with loss of grid
- Will not export if inverter detects generator
- Maximum amount of power is determined by programmed wattage

Copyright © 2026 Sol-Ark LLC

More Information

System Work Modes (Step 21 Details Continued)

Limited Power to Home

Allows inverter to track total backup and non-backed up loads using external CTs

- If grid sell is NOT enabled with LPH, inverter will back-feed GRID input with excess PV to zero non-backed loads
- If grid sell is enabled with LPH, inverter will back-feed all excess PV through GRID input and system will correct report export amount

Limited Power to Load

Allows the inverter track backup load power from only the LOAD terminals

- If grid sell is NOT enabled with LPL, inverter will limit PV to cover only backup loads
- If grid sell is enabled with LPL, inverter will back-feed GRID input with excess PV to the grid sell power amount

More Information

System Work Modes (Step 21 Details Continued)

Time of Use (TOU)

Found in the **Limiter** tab, Time of Use mode is used in conjunction with **Limited Power to Home** or **Limited Power to Load** and optionally **Grid Sell** if excess PV power is allowed to backfeed the grid. The main purpose of TOU mode is for batteries to assist with load demand.

TOU mode has six different time slots over a 24-hour period to control the batteries charge/discharge behavior during operation:

Power(W) column is the max amount of power batteries will send.

- Corresponding **Sell** box will force the continuous amount of power from batteries
- Corresponding **Charge** box will allow that amount of power to charge batteries from grid/generator (grid or gen charge)

Batt (%/V) column is the upper/lower limit for batteries to discharge/charge.

- With NO **Charge** or **Sell** box enabled, the batteries will discharge to cover loads down to this %/V
- When **Charge** is enabled, batteries will charge to the programmed %/V if below that value
- When **Sell** is enabled, batteries will discharge down to the programmed %/V

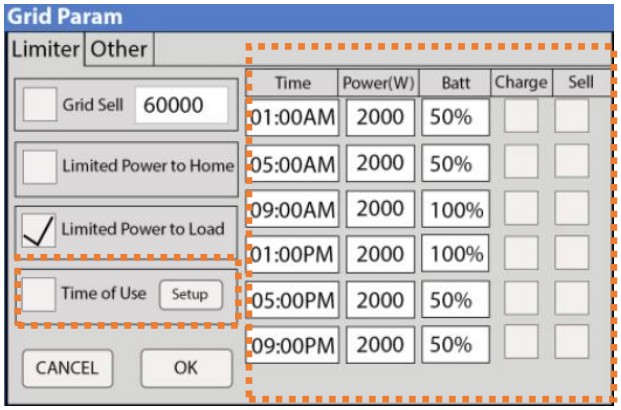

Copyright © 2026 Sol-Ark LLC

More Information

System Work Modes (Step 21 Details Continued)

Advanced Setting – Grid Peak Shaving

Allows system to limit the amount of power imported through the GRID input. The batteries will be used as the primary source to keep peak shaving value from being exceeded.

- Can be used for a generator wired in GRID input to avoid overload scenarios
- Forces TOU settings to be enabled, so must program time slots accordingly
- It's recommended to use external CTs with this feature and enable **Limited to Home** on the **Limiter** tab

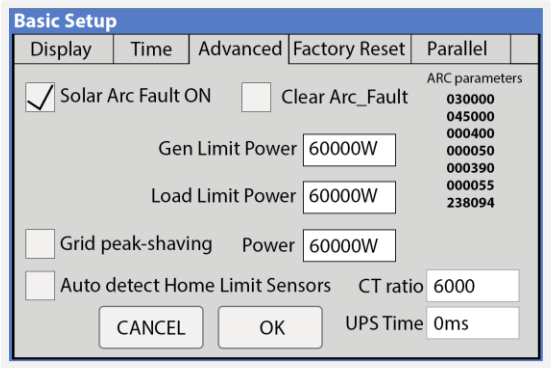

➢ Click here to return to **Step 21.** Check system performance.

More Information

Finding the Inverter Software Version

1. Click the gear icon and look at the bottom right of the screen.

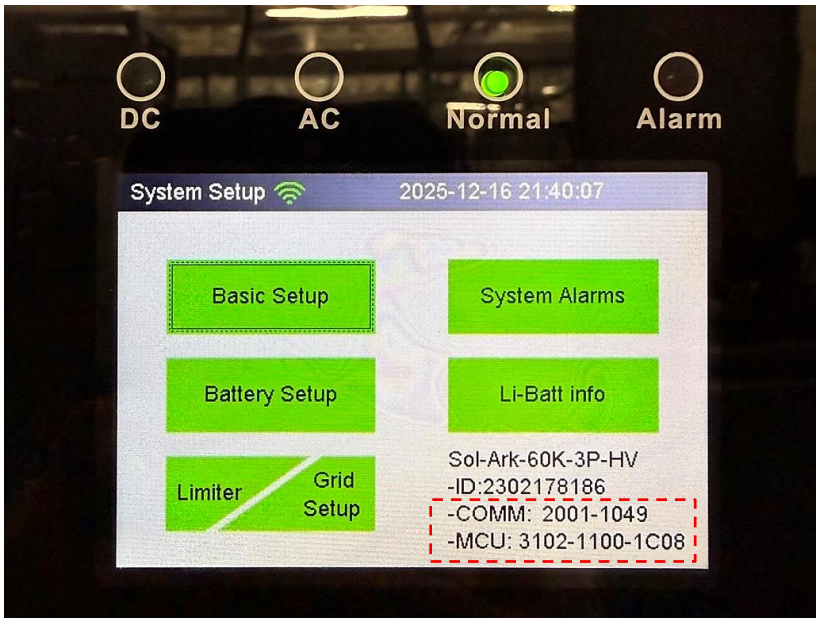

You can also see the software version on the MySolArk **Equipment** tab.

2. Go to the Software Updates page on the Sol-Ark website.
3. If the software version is different than what the website shows, scroll down and submit an **Update Request Form**.
4. About 30-40 minutes after the update was scheduled, repeat Step 1 to confirm the latest software version.

Copyright © 2026 Sol-Ark LLC

More Information

Power-ON Sequence

1. Turn ON the HV batteries
2. Press the inverter power button and wait for the normal LED to light
3. Turn ON the PV Disconnect and wait for the DC LED to light
4. Turn ON the external grid AC Disconnect or breaker feeding GRID input and wait for the AC LED to light
5. Turn ON the external load AC Disconnect or breaker feeding backup load panel

Power-OFF Sequence

1. Turn OFF the external load AC Disconnect or breaker feeding backup load panel
2. Turn OFF the external grid AC Disconnect or breaker feeding GRID input
3. Turn OFF the PV Disconnect
4. Press the inverter power button and wait for the normal LED to turn OFF
5. Turn OFF the HV batteries

➢ See the *60K Installation Manual* for more information on the startup sequence.

Sol-Ark®

LIMITLESS POWER